AEG

aeg.com/register



NKK9B821B
NKK9N821T
NKK9N82KB
TK9NK821T

EN User Manual | **Microwave combi-oven**

INSTALLATION

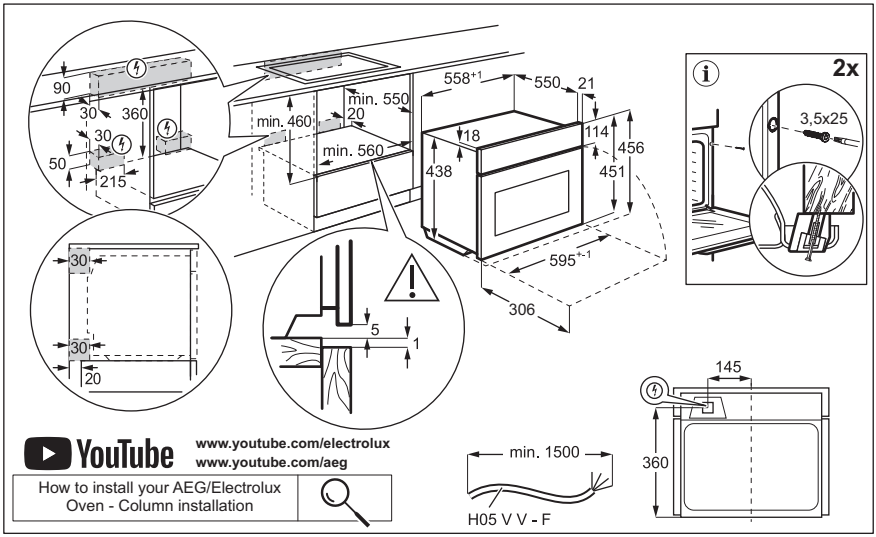

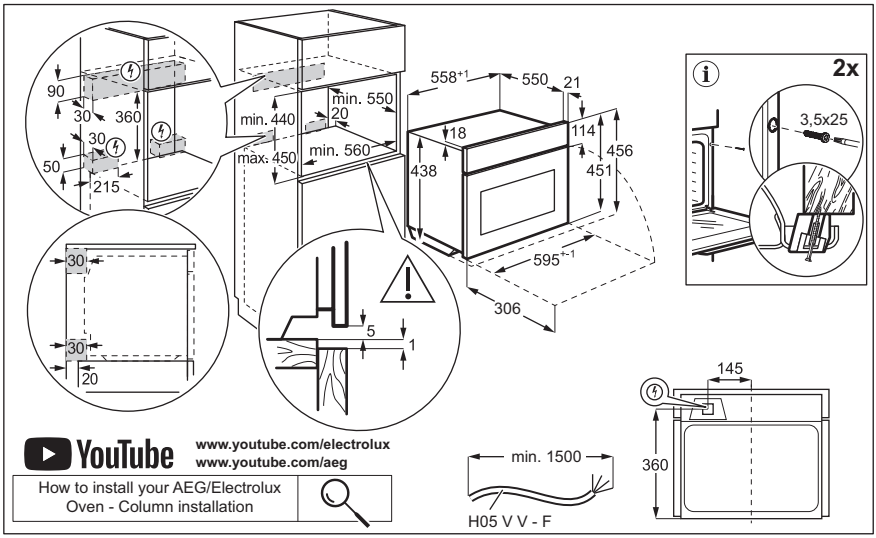

Welcome to AEG! Thank you for choosing our appliance.

Get usage advice, brochures, troubleshooting, service and repair information:
www.aeg.com/support

Subject to change without notice.

CONTENTS

1. SAFETY INFORMATION....3
2. SAFETY INSTRUCTIONS....6
3. PRODUCT DESCRIPTION....8
4. CONTROL PANEL....9
5. BEFORE FIRST USE....9
6. DAILY USE....10
7. ADDITIONAL FUNCTIONS....13
8. CLOCK FUNCTIONS....14
9. USING THE ACCESSORIES....14
10. HINTS AND TIPS....16
11. CARE AND CLEANING....20
12. TROUBLESHOOTING....21
13. ENERGY EFFICIENCY....23
14. ENVIRONMENTAL CONCERNS....23

1. ⚠ SAFETY INFORMATION

Before the installation and use of the appliance, carefully read the supplied instructions. The manufacturer is not responsible for any injuries or damage that are the result of incorrect installation or usage. Always keep the instructions in a safe and accessible location for future reference.

1.1 Children and vulnerable people safety

- This appliance can be used by children aged from 8 years and above and persons with reduced physical, sensory or mental capabilities or lack of experience and knowledge if they have been given supervision or instruction concerning the use of the appliance in a safe way and understand the hazards involved. Children of less than 8 years of age and persons with very extensive and complex disabilities shall be kept away from the appliance unless continuously supervised.

- Children should be supervised to ensure that they do not play with the appliance and mobile devices with the app.
- Keep all packaging away from children and dispose of it appropriately.
- WARNING: The appliance and its accessible parts become hot during use. Keep children and pets away from the appliance when in use and when cooling down.
- If the appliance has a child safety device, it should be activated.
- Children shall not carry out cleaning and user maintenance of the appliance without supervision.

1.2 General Safety

- This appliance is for cooking purposes only.
- This appliance is designed for single household domestic use in an indoor environment.
- This appliance may be used in offices, hotel guest rooms, bed & breakfast guest rooms, farm guest houses and other similar accommodation where such use does not exceed (average) domestic usage levels.
- Only a qualified person must install this appliance and replace the cable.
- Do not use the appliance before installing it in the built-in structure.
- Disconnect the appliance from the power supply before carrying out any maintenance.
- If the supply cord is damaged, it must be replaced by the manufacturer, its Authorised Service Centre or similarly qualified persons to avoid an electrical hazard.
- WARNING: Ensure that the appliance is switched off before replacing the lamp to avoid the possibility of electric shock.
- WARNING: The appliance and its accessible parts become hot during use. Care should be taken to avoid touching heating elements or the surface of the appliance cavity.
- Always use oven gloves to remove or insert accessories or ovenware.

- Use only the food sensor (core temperature sensor) recommended for this appliance.
- Do not activate the microwave function when the appliance is empty. Metal parts inside the cavity can create electric arcing.
- Metallic containers for food and beverages are not allowed during microwave cooking. This requirement is not applicable if the manufacturer specifies size and shape of metallic containers suitable for microwave cooking.
- WARNING: If the door or door seals are damaged, the appliance must not be operated until it has been repaired by a qualified person.
- WARNING: Only a qualified person can carry out any service or repair operation that involves the removal of a cover which gives protection against exposure to microwave energy.
- WARNING: Do not heat liquids and other foods in sealed containers. They are liable to explode.
- Use only utensils that are suitable for use in microwave ovens.
- When heating food in plastic or paper containers, observe the appliance due to the possibility of ignition.
- The appliance is intended for heating food and beverages. Drying of food or clothing and heating of warming pads, slippers, sponges, damp cloth and similar may lead to risk of injury, ignition or fire.
- If smoke is emitted, switch off or unplug the appliance and keep the door closed in order to stifle any flames.
- Microwave heating of beverages can result in delayed eruptive boiling. Care must be taken when handling the container.
- The contents of feeding bottles and baby food jars shall be stirred or shaken and the temperature checked before consumption, in order to avoid burns.

- Eggs in their shell and whole hard-boiled eggs should not be heated in the appliance since they may explode, even after microwave heating has ended.
- To remove the shelf supports first pull the front of the shelf support and then the rear end away from the side walls. Install the shelf supports in the opposite sequence.
- The appliance should be cleaned regularly and any food deposits removed.
- Do not use a steam cleaner to clean the appliance.
- Do not use harsh abrasive cleaners or sharp metal scrapers to clean the glass door since they can scratch the surface, which may result in shattering of the glass.
- Failure to maintain the appliance in a clean condition could lead to deterioration of the surface that could adversely affect the life of the appliance and possibly result in a hazardous situation.

2. SAFETY INSTRUCTIONS

2.1 Installation

⚠ **WARNING!**

Only a qualified person must install this appliance.

- Remove all the packaging.
- Do not install or use a damaged appliance.
- Follow the installation instructions available on our website.
- Always take care when moving the appliance as it is heavy. Always use safety gloves and enclosed footwear.
- Do not pull the appliance by the handle.
- Install the appliance in a safe and suitable place that meets installation requirements.
- Keep the minimum distance from other appliances and units.
- Before mounting the appliance, check if the appliance door opens without restraint.
- The appliance is equipped with an electric cooling system. It must be operated with the electric power supply.

2.2 Electrical connection

⚠ **WARNING!**

Risk of fire and electric shock.

- All electrical connections should be made by a qualified electrician.
- The appliance must be earthed.
- Make sure that the parameters on the rating plate are compatible with the electrical ratings of the mains power supply.
- Always use a correctly installed shockproof socket.
- Do not use multi-plug adapters and extension cables.
- Make sure not to cause damage to the mains plug and to the mains cable. Should the mains cable need to be replaced, this must be carried out by our Authorised Service Centre.
- Do not let mains cables touch or come near the appliance door or the niche below the appliance, especially when it operates or the door is hot.

- The shock protection of live and insulated parts must be fastened in such a way that it cannot be removed without tools.
- Connect the mains plug to the mains socket only at the end of the installation. Make sure that there is access to the mains plug after the installation.
- If the mains socket is loose, do not connect the mains plug.
- Do not pull the mains cable to disconnect the appliance. Always pull the mains plug.
- Use only correct isolation devices: line protecting cut-outs, fuses (screw type fuses removed from the holder), earth leakage trips and contactors.
- The electrical installation must have an isolation device which lets you disconnect the appliance from the mains at all poles. The isolation device must have a contact opening width of minimum 3 mm.
- This appliance is supplied with a main plug and a main cable.

2.3 Use

⚠ WARNING!

Risk of injury, burns and electric shock or explosion.

- Do not change the specification of this appliance.
- Make sure that the ventilation openings are not blocked.
- Do not let the appliance stay unattended during operation.
- Deactivate the appliance after each use.
- Be careful when you open the appliance door while the appliance is in operation. Hot air can release.
- Do not operate the appliance with wet hands or when it has contact with water.
- Do not apply pressure on the open door.
- Do not use the appliance as a work surface or as a storage surface.
- Open the appliance door carefully. The use of ingredients with alcohol can cause a mixture of alcohol and air.
- Do not let sparks or open flames to come in contact with the appliance when you open the door.
- Do not put flammable products or items that are wet with flammable products in, near or on the appliance.
- Do not share your Wi-Fi password.
- Do not use microwave function to preheat the appliance.

⚠ WARNING!

Risk of damage to the appliance.

- To prevent damage or discoloration to the enamel:
  - do not put aluminium foil directly on the bottom of cavity of the appliance.
  - do not put water directly into the hot appliance.
  - do not keep moist dishes and food in the appliance after you finish the cooking.
  - be careful when you remove or install the accessories.
- Discoloration of the enamel or stainless steel has no effect on the performance of the appliance.
- Use a deep pan for moist cakes. Fruit juices cause stains that can be permanent.
- Use only accessories supplied with this appliance or recommended by the manufacturer.
- Always cook with the appliance door closed.
- Make sure that the food sensor is not trapped by the appliance door.
- If the appliance is installed behind a furniture panel (e.g. a door) make sure the door is never closed when the appliance operates. Heat and moisture can build up behind a closed furniture panel and cause subsequent damage to the appliance, the housing unit or the floor. Do not close the furniture panel until the appliance has cooled down completely after use.

2.4 Care and cleaning

⚠ WARNING!

Risk of injury, fire, or damage to the appliance.

- Before maintenance, deactivate the appliance and disconnect the mains plug from the mains socket.
- Make sure the appliance is cold. There is the risk that the glass panels can break.

- Replace immediately the door glass panels when they are damaged. Contact the Authorised Service Centre.
- Make sure the cavity and the door are wiped dry after each use. Steam produced during the operation of the appliance condensates on cavity walls and can cause corrosion.
- Clean regularly the appliance to prevent the deterioration of the surface material.
- Fat and food remaining in the appliance can cause fire and electric arcing when the microwave function operates.
- Clean the appliance with a moist soft cloth. Use only neutral detergents. Do not use abrasive products, abrasive cleaning pads, solvents or metal objects.
- If you use an oven spray, follow the safety instructions on its packaging.

2.5 Internal lighting

⚠ WARNING!

Risk of electric shock.

- Concerning the lamp(s) inside this product and spare part lamps sold separately: These lamps are intended to withstand extreme physical conditions in household appliances, such as temperature, vibration, humidity, or are intended to signal information about the operational status of the appliance. They are not intended to be used in other applications and are not suitable for household room illumination.
- This product contains a light source of energy efficiency class G.
- Use only lamps with the same specifications.

2.6 Service

- To repair the appliance contact the Authorised Service Centre.
- Use original spare parts only.

2.7 Disposal

⚠ WARNING!

Risk of injury or suffocation.

- Contact your municipal authority for information on how to dispose of the appliance.
- Disconnect the appliance from the mains supply.
- Cut off the mains electrical cable close to the appliance and dispose of it.

3. PRODUCT DESCRIPTION

3.1 General overview

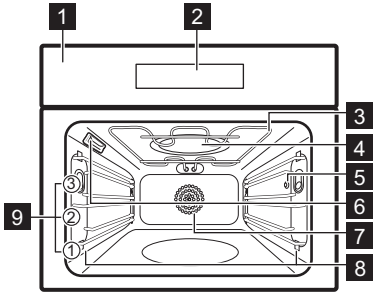

1 Control panel
2 Display
3 Heating element
4 Microwave generator
5 Socket for the food sensor
6 Lamp
7 Fan
8 Shelf support, removable
9 Shelf positions

4. CONTROL PANEL

4.1 Control panel overview

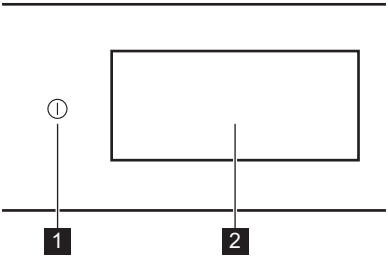

1	ON / OFF	Press and hold to turn the appliance on and off.
2	Display	Shows the current settings of the appliance.

The control panel provides access to various cooking functions and dishes. It also displays the information about its current operating status.

4.2 Display

The display is fully interactive, scrollable and divided into defined sections. You can swipe across the screen to navigate left or right.

OK	To confirm the selection / setting.
> <	To navigate to the next or previous level in the menu.
^ v	To access and adjust additional settings.
♥	To save current settings in: Favourites.
♡	To delete current settings in: Favourites.
⚙	To go to menu: Settings.
💡	To turn the lamp on and off.
⏻	To turn the options on and off.
🔒	The appliance is locked.
🔔	Sound Alarm function is activated.
🔔	Sound Alarm and stop cooking function is activated.
🔔	Pop up message only is activated.
⏱	Delayed start function is activated.
×	To close the pop-up message or cancel the setting.
📶	Wi-Fi connection is turned on.
📶	Wi-Fi connection is turned off.
📡	Remote Operation is turned on.
🍃	Function with energy saving mode.

5. BEFORE FIRST USE

⚠ WARNING!

Refer to Safety chapters.

5.1 First connection

The display shows welcome message after the first connection. You can choose between starting or skipping the onboarding process. The settings can be revisited and modified whenever it is necessary.

Adjust the settings: Language, Time of Day, Wireless connection.

5.2 Wireless connection

The appliance enables Wi-Fi network connection and mobile device linking. You can receive notifications, control and monitor your appliance from your mobile device.

To connect the appliance you need:
- Wireless network with the Internet connection.
- Mobile device connected to the same wireless network.

1. To download the app scan the QR code located on the back cover. You can also

download the app directly from the app store.
2. Follow the app onboarding instructions.
3. Turn on the appliance.
4. Press the display to enter menu and press ⚙ Settings / Connections.
5. Press to turn on or off: Wi-Fi.

The appliance wireless module starts within 90 sec.

Frequency	**2.4 GHz WLAN :** 2400 - 2483.5 MHz
	Bluetooth : 2400 - 2483.5 MHz
Max Power	**2.4 GHz WLAN :** EIRP < 20 dBm (100 mW)
	Bluetooth : EIRP < 20 dBm (100 mW)
Protocol	**2.4 GHz WLAN :** IEEE 802.11bgn

5.3 Software licences

The software in this product contains components that are based on free and open source software. AEG acknowledges the contributions of the open software and robotics communities to the development project.

To access the source code of these free and open source software components whose license conditions require publishing, and to see their full copyright information and applicable license terms, visit: http://aeg.opensoftwarerepository.com (folder NIU6).

5.4 Initial preheating and cleaning

Preheat the empty appliance before the first use and contact with food. The appliance can emit unpleasant smell and smoke. Ventilate the room during preheating.

1. Remove all accessories and removable shelf supports from the appliance.
2. Enter menu and select: Functions.
3. Set the function. Set the maximum temperature. Let the appliance operate for 1 h.
4. Set the function. Set the maximum temperature. Let the appliance operate for 15 min.
5. Turn off the appliance and wait until it is cold.
6. Clean the appliance and the accessories only with a microfibre cloth, warm water and a mild detergent.
7. Put the accessories and removable shelf supports back to their initial position.

6. DAILY USE

⚠ WARNING!

Refer to Safety chapters.

6.1 Menu

Press the display or the ON / OFF button to enter menu.

- Home
- Functions
- Dishes
- Settings

6.2 Home

Submenu includes programmes, functions, dishes and settings.

6.3 Functions

Submenu includes a list of cooking functions.

The list of functions may vary depending on the software version.

1. Enter menu and select: Functions.
2. Select the heating function.
3. Adjust the settings.
4. Press START. You can plug the Food Sensor at any time before or during cooking. Refer to "Using the accessories, Food sensor" chapter.
5. ^ - press to adjust the settings during cooking.
6. STOP - press to turn off the heating function.

Fast Preheat is available only for some heating functions. For more information on preheat options refer to "Daily use" chapter, Settings, Submenu: Preferences.

Top
Intense heat for rapid browning on top.

Bottom
Evenly brown bottom of food. Good for pizza or pie, and finishing cakes or quiches. Preheat the oven and use lowest shelf level.

Hot Air
Even baking and cooking on one level. Set a lower temperature than for Top & Bottom.

Top & Bottom
For everyday cooking on a single level. Good for all foods, like casseroles and baked goods.

Hot air & Top
Roast larger meat joints and poultry with bones for tender results and crispy surface.

Hot air & Bottom
Evenly bake dough with a crispy crust. Good for pizza, quiche, tart, or pie.

Hot air, Top & Bottom
This function is ideal for ready meals.

Microwave
Quickly defrost, heat up, or cook food.

Grill + MW
Speed up your crispy surface.

Turbo Grilling + MW
Speed up your roasting and cooking.

True Fan Cooking + MW
Speed up your baking and cooking.

Conventional Cooking + MW
Speed up your conventional baking and cooking.

Reheat
Gently reheat leftovers to get the best taste and texture.

Grill
Evenly grill or brown vegetables or meat. Also good for toasting bread.

Dough Prove
Optimized temperature for fast rising.

Defrost
Gentle defrosting for further preparation. Turning improves the results. For sensitive foods such as meat, the recommendation is turning twice upside down during the defrosting process.

Stew
Get tender, juicy stews by simmering the ingredients all together.

Slow cook
Slow cooking increases the cooking time, but you will get a better cooking result. Before you put the meat in the oven, sear it.

Melt
Gently melt butter or chocolate at a low power.

Preserve
Get juicy fruits and vegetables canned at a low temperature. Put the heat resistant canning jars on a baking tray filled with water.

Plate warming
To preheat plates before serving.

Keep Warm
Keep dishes warm to be served. Please note that some dishes may continue to cook and dry out while being kept warm. Cover the dishes if necessary.

Dehydrate
Evenly dry out fruits, herbs, and vegetables at a low temperature. Open the door occasionally during drying to improve the drying result.

Roast
Get a crispy outside and tender inside for meat, poultry, or vegetables.

Bread Baking
Use this function to prepare bread and bread rolls with professional-like result in terms of crispiness, colour and crust gloss.

The lamp may turn off automatically at a temperature below 80 °C during some heating functions.

If you open the door, the microwave function stops. To start it again, close the door.

6.4 Setting: Microwave

1. Remove all accessories, except the wire shelf.
2. Press Microwave on the main display.
3. Set the microwave time and power.
4. Press START.
5. STOP - press to turn off the function.

If you open the door, the function stops. To start it again, press START.

6.5 Dishes

Dishes submenu consists of a set of programmes that are designed for dedicated dishes. Each dish in this submenu is provided with a suitable setting. The time, temperature and if available microwave power can be adjusted during cooking.

For some of the dishes you can also cook with Food Sensor.

1. Enter menu and select: Dishes.
2. Choose a dish or a food type.
3. Adjust settings according to cooking preferences. Adjust the weight. Option is available for selected dishes. Press OK.
4. Place the food inside the appliance according to the instructions available on the screen.
5. Press START.

When the function ends, check if the food is ready. Extend the cooking time, if needed.

6.6 Favourites

This functionality is available for selected models only.

You can save up to 20 of your favourite settings, such as heating function, dish or cleaning function.

To save the setting select the preferred setting and press ♡.

Select: Favourites

1. Enter menu and press: Home section and move the scroll bar to the right.
2. Press: View favourites to check the saved settings.
3. Select one of the saved settings.
4. Press START to start cooking.

Delete: Favourites

1. Enter menu and select: Home section and move the scroll bar to the right.
2. Press: View favourites to check the saved settings.
3. Press: ♥ to delete the saved settings.

6.7 Settings

This submenu includes a list of settings.

Press the display or the ON / OFF button to enter menu and press Settings.

Submenu: Setup

Language	To set the appliance language.
Time of Day	To set the current time.
Display Brightness	To set the display brightness.
Key Tones	To turn the tone of the touch fields on and off. It is not possible to mute the tones for ⏻.
Buzzer Volume	To set the volume of key tones and signals.
Temperature unit	To show the current temperature unit.

Submenu: Service

Demo Mode	Activation / deactivation code: 2468
Software Version	Information about software version.
Reset All Settings	Restores factory settings.

Submenu: Preferences

Light	Turns the lamp on and off.
Child Lock	Prevents accidental activation of the appliance.

Preheat/ HeatUp	None - conventional way of preheating the appliance. It is set as default and available for all cooking functions. The preference can be changed to another preheat type.
	Eco - preheating the appliance with less energy consumption. It is available for all cooking functions.
	Fast - shortens the heat up time. It is available for some of the functions only.
Standby Screen Personalisation	To customize the screen features and shortcuts.

Submenu: Connections

Connect To Wi-Fi	To connect the appliance with the wireless network.
Wi-Fi	To enable and disable: Wi-Fi.
Network	To check network status and the signal power of: Wi-Fi.
Forget Network	To disable current network from auto connection with the appliance.
Remote Operation	To start remote operation automatically after pressing START. Option visible only after you turn on: Wi-Fi.

7. ADDITIONAL FUNCTIONS

7.1 Child Lock

This function prevents accidental operation of the appliance. It can be activated at any time.

1. Enter menu.
2. Select ⚙ / Preferences / Child Lock.

Child Lock is activated. To enable the use of the appliance, press the code letters in an alphabetical order.

7.2 Automatic switch-off

For safety reasons, if the heating function is active and no settings are changed, the appliance will turn off automatically after a certain period of time.

(°C)	(h)
30 - 115	12.5
120 - 195	8.5
200 - 230	5.5

If you intend to run a heating function for a duration exceeding the automatic switch-off time, set the cooking time. Refer to the 'Clock functions' chapter.

7.3 Cooling fan

When the appliance operates, the cooling fan turns on automatically to keep the surfaces of the appliance cool. If you turn off the appliance, the cooling fan can continue to operate until the appliance cools down.

8. CLOCK FUNCTIONS

8.1 Clock functions description

Function	Description
Timer	To set the cooking duration. Maximum is 23 h 59 min. To set what happens when the time is up select preferred: End Action. Timer can be used independently, even when the oven is not running.
End Action	**Sound Alarm** When the time is up the signal sounds. This function can be set at any time, even when the appliance is turned off.
	Sound Alarm and stop cooking When the time is up the signal sounds and the heating function turns off. Not available for microwave functions.
	Pop up message only When the time is up the message appears on the display. This function has no effect on the operation of the appliance.
Delayed start	To postpone the start and / or end of cooking. Not available for microwave functions.
Time Extension	To extend the cooking time.
Uptimer	To show how long the appliance operates. Maximum is 23 h 59 min. It starts automatically when an oven process is started and stops when the process is finished. It is visible on the main screen in case where no other timer is set. This function has no effect on the operation of the appliance.

8.2 Timer

1. Choose the heating function and set the temperature.
2. Press: Timer.
3. Set the duration. You can select the preferred end action by pressing one of the symbols.
4. Press OK to confirm and return to the main screen.

8.3 Delayed start

1. Choose the heating function and set the temperature.
2. Press •••.
3. Press: Delayed start.
4. Scroll to set desired start time and press OK.
5. You can now set desired End time or press OK to skip this step.
6. Press OK to return to the main screen.

8.4 Time of Day

1. Turn on the appliance.
2. Press ⚙ / Setup / Time of Day.
3. Set the time.
4. Press OK.

8.5 Changing timer settings

You can change the set time during cooking at any time.

1. Press ^ / Timer.
2. Set new timer value. Press OK.

9. USING THE ACCESSORIES

⚠ WARNING!

Refer to Safety chapters.

9.1 Inserting accessories

Accessories available depending on model. Scan the QR code to check how to use accessories supplied with your appliance. You can order optional accessories separately. For more information, please contact your local supplier.

Use only suitable cookware and material. Refer to "Hints and tips" chapter, Microwave suitable cookware and materials.

A small indentation at the top increases safety and provides tilt protection. The indentations are also anti-tip devices. The rim around the shelf prevents cookware from slipping off the shelf.

Insert the accessory (wire shelf / tray) between the guide bars of the shelf support. Make sure that the shelf touches the back of the oven interior and the feet point down.

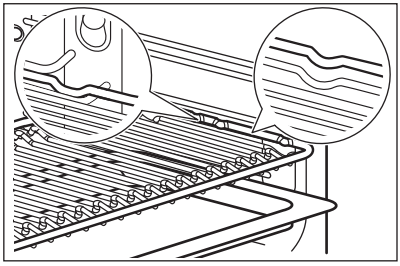

If your tray has a slope, position it towards the back of the oven interior.

If there is an inscription on the accessory, make sure it is facing you.

If you are using a tray with holes place the tray / pan underneath, to collect dripping liquids.

9.2 Food Sensor

It measures the temperature inside the food.

There are two temperatures to be set:

- °C - the temperature inside the appliance. It should be at least 25 °C higher than the food core temperature.
- - the food core temperature.

Recommendations:

- Ingredients should be at room temperature.
- Do not use it for liquid dishes.
- During cooking the needle of the food sensor must be fully inserted in the dish.

Cooking with: Food Sensor

⚠ WARNING!

There is a risk of burns as Food Sensor and shelf supports become hot. Do not touch Food Sensor handle with bare hands. Always use oven gloves.

1. Select a heating function from the menu: Functions or a dish from the menu: Dishes. Do not use Food Sensor with microwave functions, only standard heating functions and microwave combination functions. Refer to "Daily Use" chapter.
2. Set the oven temperature and cooking time, if needed.
3. Press OK.
4. Press START.
5. Insert Food Sensor inside the dish:
   Meat, poultry and fish
   Insert the entire needle of the Food Sensor into the meat or fish at its thickest part.

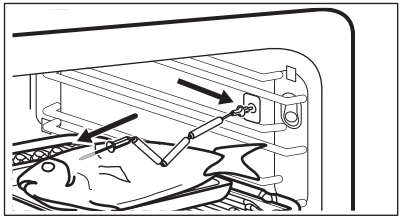

   Casserole
   Insert the tip of Food Sensor exactly in the centre of the casserole. Food Sensor should be stabilized in one place during cooking. Use a solid ingredient to achieve that. Use the rim of the baking dish to support the silicone handle of Food Sensor. The tip of Food Sensor should not touch the bottom of a baking dish.

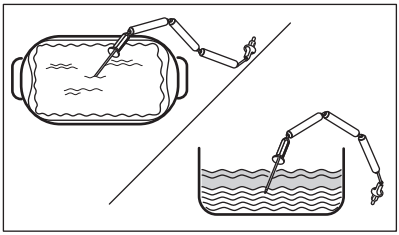

6. Plug Food Sensor into the socket located inside the appliance. Refer to "Product description" chapter.

The display shows the symbol and the current temperature of Food Sensor.

7. ^ - press to adjust the settings.
8. Select Food Sensor card to set the core temperature of the sensor or set up the preferred option:
   - Sound Alarm - when food reaches the core temperature, the signal sounds.
   - Sound Alarm and stop cooking - when food reaches the core temperature, the signal sounds and the cooking stops.
   - Pop up message only - when food reaches the core temperature, the message appears on the display.
9. Press OK.
10. When the food reaches the set temperature, the signal sounds. Check if the food is ready. Extend the cooking time, if needed.
11. STOP - press to turn off the heating function.
12. Remove Food Sensor plug from the socket and remove the dish from the appliance.

10. HINTS AND TIPS

10.1 Cooking recommendations

Cooking and baking processes are only suitable on one level.

The temperature and cooking times in the tables are for guidance only. They depend on the recipes, quality and quantity of the ingredients used.

Your appliance may bake or roast differently than your previous appliance. The hints below show recommended settings for temperature, cooking time and shelf position for specific types of the food.

Count the shelf positions from the bottom of the oven floor.

If you cannot find the settings for a specific recipe, look for a similar one.

For energy saving tips refer to "Energy efficiency" chapter.

Symbols used in the tables:

	Food type
	Heating function
°C	Temperature
	Accessory
	Weight (kg)
POWER	Microwave power (W)
	Shelf position
	Cooking time (min)

10.2 Slow cook

This function allows you to prepare lean, tender pieces of meat and fish. Use the Food Sensor to measure temperature inside the food. Refer to the table below to find the recommended appliance temperature setting °C that will allow you to achieve the desired temperature inside the food ?°C.

For roasting flavour and colour, fry the meat in a hot pan for several minutes before inserting it to the appliance. Put the food in the roasting dish and place it on a wire shelf.

°C	°C
< 65	90
66 - 75	110

°C	°C
> 75	150

10.3 Information for test institutes

Baking on one level
Tests according to: EN 60350-1, IEC 60350-1.

				°C	
Small cakes, 20 per tray **1)**	Top & Bottom	Baking tray **2) 3)**	2	150	18 - 28
Small cakes, 20 per tray **1)**	Hot Air	Baking tray **2) 3)**	2	150	18 - 28
Fatless sponge cake **1)**	Top & Bottom	Wire shelf	1	170	25 - 35
Fatless sponge cake **1)**	Hot Air	Wire shelf	1	170	28 - 38
Short bread **1)**	Top & Bottom	Baking tray **2) 3)**	2	140	28 - 38
Short bread **1)**	Hot Air	Baking tray **2) 3)**	2	140	25 - 35
Apple pie **4)**	Top & Bottom	Wire shelf	1	170	65 - 75
Apple pie **4)**	Hot Air	Wire shelf	1	170	57 - 67
Toast **1) 5)**	Top	Wire shelf	2	230	7 - 12

1) Preheat the appliance until set temperature is reached using the setting: Preheat / None. Do not use: Preheat / Fast and Eco. Refer to Daily use, Settings, Submenu: Preferences.

2) Use baking tray with the slope towards the back of the oven interior.

3) Baking tray must touch the back of the oven interior.

4) 2 tins placed diagonally (Ø 20 cm). The right one to be positioned more in the front than the left one.

5) According to: IEC 60350-1:2016 and IEC 60350-1:2023.

Microwave and microwave combi functions
Tests according to: EN 60705, IEC 60705.

Use wire shelf. It must touch the back of the oven interior.

		POWER	°C		
Sponge cake **1)**	Microwave	500	-	1	8 - 10
Meatloaf **1) 2)**	Microwave	300	-	1	30 - 35
Egg custard **3)**	Microwave	400	-	1	18 - 23
Defrosting minced meat (500 g)**4)**	Microwave	200	-	1	7 - 8

		POWER	°C		
Cake **3)**	Conventional Cooking + MW	200	170	1	22 - 27
Potato gratin **5)**	Turbo Grilling + MW	200	180	1	35 - 40
Chicken (1100 g)**6)**	Turbo Grilling + MW	200	200	1	30
	Hot air & Top	-			18 - 23

1) Turn container around by 1/2, halfway through the cooking time.

2) Use MW suitable clingfilm during cooking. Prick the clingfilm several times before cooking.

3) Do not turn the food during the cooking process.

4) Turn the meat upside down over the longest side, one time after 1/3 and a second time after 2/3 of the elapsed cooking time.

5) Turn container clockwise by 1/4, halfway through the cooking time.

6) Place a plate at the bottom of the oven. Place chicken directly on wire shelf with breast side down. After 30 min, turn the chicken upside down and change the heating function to: Hot air & Top.

Additional recipes

				POWER	°C	
Meringues **1)**	Top & Bottom	Baking tray **2) 3)**	2	-	100	90 - 180
Meringues **1)**	Hot Air	Baking tray **2) 3)**	2	-	100	90 - 180
Scones **1)**	Top & Bottom	Baking tray **2)**	3	-	200	11 - 13
Scones **1)**	Hot Air	Baking tray **2)**	3	-	190	10 - 12
Chicken **4)**	Hot air & Top	Baking tray **2)**	1	-	200	65 - 75
Popcorn **5)**	Microwave	Flat ceramic plate	bottom	700	-	3 - 4
Plated meals, chilled (1 portion) **6)7)**	Microwave	Wire shelf **8)**	1	500	-	7 - 9
Liquids in baby bottles **9)**	Microwave	-	bottom	1000	-	0.5
Lasagne, frozen (400 g)**10)**	Turbo Grilling + MW	Wire shelf **8)**	1	100	210	23 - 28
Lasagne, frozen (600 g)**10)**	Conventional Cooking + MW	Wire shelf **8)**	1	200	190	48 - 53
Pizza, frozen **10)**	Conventional Cooking + MW	Wire shelf **8)**	1	200	210	12 - 16
Grilled vegetables, mixed	Turbo Grilling + MW	Wire shelf **8)**	1	300	180	20 - 25
Roast pork	True Fan Cooking + MW	Wire shelf **8)**	1	300	165	65 - 70
Stuffed mushrooms	Turbo Grilling + MW	Wire shelf **8)**	1	300	180	12 - 17

Lasagne with dry pasta sheets	Conventional Cooking + MW	Wire shelf **8)**	1	200	165	30 - 35

1) Preheat the appliance until set temperature is reached using the setting: Preheat / None. Do not use: Preheat / Fast and Eco. Refer to Daily use, Settings, Submenu: Preferences.

2) Use baking tray with the slope towards the back of the oven interior.

3) Use baking paper.

4) Place chicken with breast side down. Turn it upside down halfway through the cooking time.

5) The bag should be taken out of the appliance when the kernels stop popping.

6) Cover the food with a microwavable plastic lid.

7) Turn container around by 1/2, halfway through the cooking time.

8) Wire shelf must touch the back of the oven interior.

9) Position the bottle in the centre of the cavity bottom without using any accessories.

10) Do not turn the food during the cooking process.

10.4 Microwave recommendations

Place the food in the centre of the wire shelf. Use first shelf position.

Turn or stir the food halfway through the cooking time to improve the results.

Stir liquid dishes from time to time.

Stir the food before serving.

Put the spoon into the cup or glass when heating up liquids, to improve heat distribution and avoid overboiling. The spoon must not touch any part of the oven interior, this may cause sparking.

Place the food into the appliance without packaging. The packaged ready meals can be put into the appliance only when the packaging is microwave safe. Refer to "Hints and tips", Microwave suitable cookware and materials section.

Do not cover the food when using Microwave combi functions. Refer to "Daily use" chapter.

Do not use Microwave functions or Microwave combination functions when there is no food inside the appliance.

Microwave cooking

Cover the food for cooking or reheating with microwave functions. If you want to keep a crust, cook food without a cover.

Do not overcook the dishes by setting the power and time too high. The food can dry out, burn or cause fire.

Do not use the appliance to cook eggs or snails in their shells, because they can burst. Pierce the yolk of fried egg before reheating it.

Pierce food with skin or peel several times before cooking.

Cut vegetables into similar-sized pieces.

After you turn off the appliance, take the food out and let it stand for a few minutes to allow the heat distribute evenly.

Microwave defrosting

Place the frozen, unwrapped food on a small upturned plate with a container below it, or on a defrosting rack or plastic sieve so that the defrosting liquid can leak out.

Remove defrosted pieces subsequently.

To cook fruit and vegetables without defrosting them first, you can use a higher microwave power.

Turning improves the results. For sensitive foods such as meat, turn upside down twice during defrosting.

10.5 Microwave suitable cookware and materials

For the microwave use only suitable cookware and materials. Use below table as a reference.

Check the cookware / material / food container specification before use.

For other specific microwave cookware not listed in this table, follow manufacturer instructions.

Cookware / Material			
Ovenproof glass and porcelain with no metal components, e.g. heat-proof glass	✓	✓	✓
Non-ovenproof glass and porcelain without any silver, gold, platinum or other metal decorations	✓	✗	✗
Glass and glass ceramic made of ovenproof / frost-proof material	✓	✓	✓
Ovenproof ceramic and earthenware without any quartz or metal components and glazes which contain metal	✓	✓	✓
Ceramic, porcelain and earthenware with unglazed bottom or with small holes, e.g. on handles	✗	✗	✗
Heat-resistant plastic up to 200 °C	✓	✓	✗
Cardboard, paper only	✓	✗	✗
Clingfilm	✓	✗	✗
Microwave clingfilm	✓	✓	✗
Roasting dishes made of metal, e.g. enamel, cast iron	✗	✗	✗
Baking tins, black lacquer or silicon-coated	✗	✗	✗
Baking tray	✗	✗	✗
Wire shelf	✓	✓	✓

10.6 Power settings

Below data is for guidance only.

800 - 1000 W
- Heating up liquids

600 - 700 W
- Simmering rice
- Cooking vegetables
- Popcorn

400 - 500 W
- Heating one-plate meals
- Simmering stews
- Defrosting and heating ready frozen meals

300 W
- Cooking / Heating delicate food
- Heating baby food
- Continuing cooking

100 - 200 W
- Defrosting bread, fruit, cakes, pastries, cheese, butter, meat and fish
- Melting chocolate and butter

11. CARE AND CLEANING

⚠ **WARNING!**
Refer to Safety chapters.

11.1 Notes on cleaning

Cleaning Agents

- Clean the front of the appliance only with a microfibre cloth with warm water and a mild detergent.
- Use a cleaning solution to clean metal surfaces.
- Clean stains with a mild detergent.

Everyday Use

- Clean the interior of the appliance after each use. Fat accumulation or other residue may cause fire.
- Clean the appliance ceiling carefully from residue and fat.
- Do not store food in the appliance for longer than 20 minutes. Dry the interior of the appliance only with a microfibre cloth after each use.

Accessories

- Clean all accessories after each use and let them dry. Use only a microfibre cloth with warm water and a mild detergent. Do not clean the accessories in a dishwasher.
- Do not clean the non-stick accessories using abrasive cleaner or sharp-edged objects.

11.2 Removing the shelf supports

Remove the shelf supports to clean the appliance.

1. Turn off the appliance and wait until it is cold.
2. Carefully pull the shelf supports up and out of the front catch.
3. Pull the supports out of the rear catch.

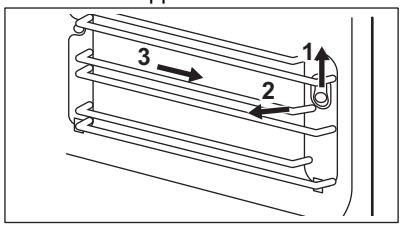

Install the shelf supports in the opposite sequence.

If the telescopic runners are supplied, its retaining pins must point to the front.

11.3 Replacing the lamp

⚠ WARNING!

Risk of burns, the glass cover may be hot. Use protective glove when touching the lamp.

Only service is allowed to replace the lamp. Contact your Authorised Service Centre.

12. TROUBLESHOOTING

⚠ WARNING!

Refer to Safety chapters.

12.1 What to do if...

Problem description	Cause and remedy
You cannot activate or operate the appliance.	The appliance is not connected to an electrical supply or it is connected incorrectly.
The appliance does not heat up.	The clock is not set. To set the clock refer to "Clock functions" chapter.
	The door is not closed correctly.
	The fuse is blown. Make sure the fuse is the cause of the problem. If the problem recurs, contact a qualified electrician.
	Child Lock is activated.

Problem description	Cause and remedy
The lamp is turned off.	The lamp is burnt out. Replace the lamp. For details refer to "Care and Cleaning" chapter.
Trouble with wireless network signal.	Check if your mobile device is connected to the wireless network. Check your wireless network and router. Restart the router.
New router installed or router configuration changed.	To configure appliance and mobile device again, refer to "Before first use" chapter, Wireless connection.
The wireless network signal is weak.	Move router as close to the appliance as possible.
The wireless signal is disrupted by microwave oven placed near the appliance.	Turn off the microwave oven. Avoid using microwave oven and the Remote operation of the appliance at the same time. Microwaves disrupt WiFi signal.

12.2 Error codes

When the software error occurs, the display shows error message. You will find the list of problems in the table below.

Code and description	Remedy
F102 - the door is not fully closed or the door lock is broken. **1)**	Close the door. Turn the appliance off and on.
F111 - Food Sensor is not correctly inserted into the socket.	Fully plug Food Sensor into the socket.
F240, F239 - the touch fields on the display do not work properly.	Clean the surface of the display. Make sure there is no dirt on the touch fields.
F908 - the appliance system cannot connect with the control panel.	Turn the appliance off and on.
F131 - the temperature of magnetron sensor is too high. **1)2)**	Turn the appliance off and wait until it cools down. Turn the appliance on again.
F602, F603 - Wi-Fi is not available. **1)2)**	Turn the appliance off and on.

1) When the following error message continues to appear on the display, it means a faulty subsystem may have been disabled. In such a case contact your dealer or an Authorized Service Centre.

2) If one of these errors occurs, the rest of the appliance functions will continue to work as usual.

12.3 Service data

If you cannot find a solution to the problem yourself, contact your dealer or an Authorised Service Centre.

The necessary data for the service centre is on the rating plate. The rating plate is located on the front frame of the appliance. It is visible when you open the door. Do not remove the rating plate from the appliance.

We recommend that you write the data here:

Model (MOD.) :
Product number (PNC):
Serial number (S.N.):

13. ENERGY EFFICIENCY

13.1 Product Information for power consumption and maximum time to reach applicable low power mode

Power consumption in standby	0.8 W
Power consumption in network standby	2.0 W
Maximum time needed for the equipment to automatically reach the applicable low power mode	20 min

For guidance on how to activate and deactivate the wireless network connection, refer to "Before first use" chapter.

13.2 Energy saving tips

Following tips below will help you save energy when using your appliance.

Make sure that the appliance door is closed when the appliance operates. Do not open the appliance door too often during cooking. Keep the door gasket clean and make sure it is well fixed in its position.

Use metal cookware and dark, non-reflective tins and containers to improve energy saving (only when you use a non-microwave function).

Do not preheat the appliance before cooking unless specifically recommended.

Keep breaks between baking as short as possible when you prepare a few dishes at one time.

Cooking with fan
When possible, use the cooking functions with fan to save energy.

Residual heat
When the cooking duration is longer than 30 min, reduce the appliance temperature to minimum 3 - 10 min before the end of cooking. The residual heat inside the appliance will continue to cook.

Use the residual heat to keep the food warm or warm up other dishes.

When you turn off the appliance, the display shows the residual heat or temperature.

If a programme with Timer is activated and the cooking time is longer than 30 min, the heating elements automatically turn off earlier in some appliance functions.

Keep food warm
Choose the lowest possible temperature setting to use residual heat and keep the food warm. The residual heat indicator or temperature appears on the display.

Cooking with the lamp off
Turn off the lamp during cooking. Turn it on only when you need it.

Standby mode
After 2 min the display switches to standby mode.

14. ENVIRONMENTAL CONCERNS

Recycle materials with the symbol ♺. Put the packaging in relevant containers to recycle it. Help protect the environment and human health by recycling waste of electrical and electronic appliances. Do not dispose of appliances marked with the symbol with the household waste. Return the product to your local recycling facility or contact your municipal office.

aeg.com

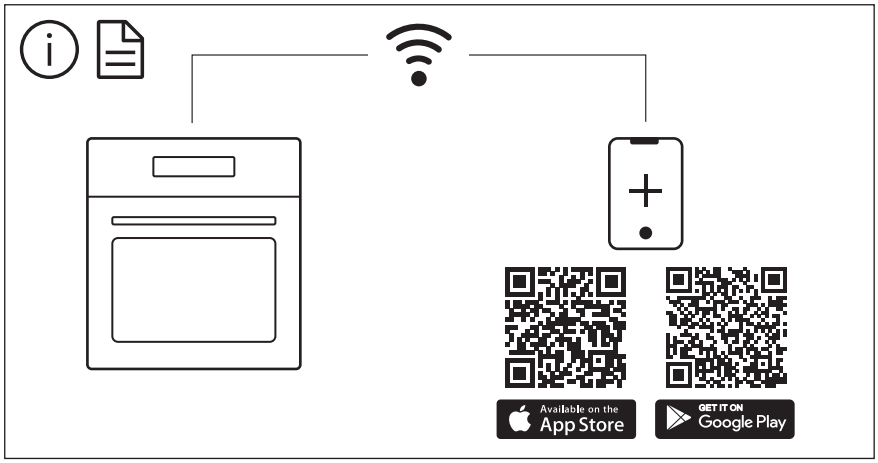

867381608-C-232025