Electrolux

electrolux.com/register

EN User Manual **Tumble Dryer** 2

EDV80****

EDV90****

Enjoy peace of mind. Register your appliance today.

Stay updated on better living services, safety notices and shop for accessories.

1. **Open the camera app on your smartphone and point at the QR code to scan.**

   The product registration QR code is located inside the door rim.

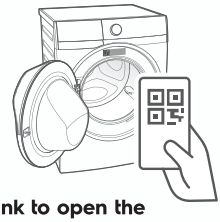

2. **Tap the notification or link to open the registration form.**
3. **Complete your details and enjoy peace of mind.**

Full version of the User Manual is avialable on www.electrolux.com. Alternative, scan QR code, tap Electrolux logo, and search for your appliance.

Nomor MKG : IMKG.2357.09.2024

Welcome to Electrolux! Thank you for choosing our appliance.

Get usage advice, brochures, troubleshooting, service information, buy accessories & spare parts, online product registration :
www.electrolux.com

CUSTOMER CARE AND SERVICE

We recommend the use of original spare parts. When contacting Service, ensure that you have the following data available. The information can be found on the rating plate. Model, PNC, Serial Number.

Warning / Caution-Safety information.

General information and tips.

Environmental information.

Subject to change without notice.

CONTENT

1. SAFETY INFORMATION 3
2. PRODUCT DESCRIPTION 7
3. INSTALLATION 8
4. CONTROL PANEL 11
5. PROGRAMME TABLE 13
6. OPTIONS AND SETTINGS 14
7. DAILY USE 18
8. DRYING HINTS 20
9. CARE AND CLEANING 22
10. TROUBLESHOOTING 23
11. TECHNICAL DATA 25
12. ENVIRONMENT CONCERNS 26

1. ⚠ SAFETY INFORMATION

Read the instructions.

1.1 Dryer Safety

Failure to follow these safety instructions could damage the dryer or your clothes.
You may then not be covered by warranty for this damage.
Only plug this appliance directly into an AC power supply, which is properly earthed and has the correct voltage.

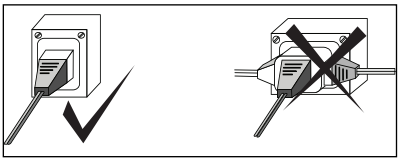

The Model Name, Serial Number, Product Number Code (PNC) and other key information about your appliance is printed on the Rating plate, which can be found by opening the appliance door and looking at the top of the door opening.

⚠ **CAUTION!** If this appliance is supplied from a cord extension set or electrical portable outlet device, the cord extension set or electrical portable outlet device must be positioned such that it is not subject to splashing or ingress of moisture.

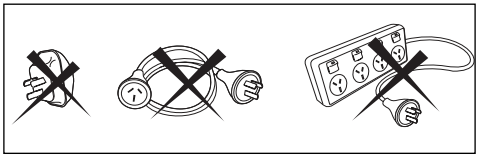

For Safety reasons we strongly advise against the use of double adaptors, extension cords or power boards.

1.2 Child Safety

- This appliance is not intended for use by persons (including children) with reduced physical, sensory or mental capabilities, or lack of experience and knowledge, unless they have been given supervision or instruction concerning use of the appliance by a person responsible for their safety.
- The children should be supervised to ensure that they do not play with the appliance.

1.3 General Safety

⚠ CAUTION!

- If the electrical cord of this appliance is damaged, it must be replaced by the Manufacturer, Authorized Service Agent or similarly qualified person in order to avoid a hazard.
- These dryers are for drying clothes, towels, and linen at home. Do not use them for any other purpose.
- Lint must not be allowed to accumulate around the tumble dryer.
- Do not dry unwashed items in the tumble dryer.
- Pre-treatment sprays and stain remover can damage plastic components on your machine. If you use pre-treatment sprays or stain removers, apply them to the clothing well away from your machine.

⚠ WARNING!
Never stop a tumble dryer before the end of the drying cycle unless all items are quickly removed and spread out so that the heat is dissipated.

1.4 Fire Hazards

⚠ **WARNING!**
Some fabrics are not suitable for tumble drying. The following **MUST NOT** be placed in your dryer due to the risk of a fire or an explosion.

- Items that have been spotted or soaked with vegetable oil, cooking oil, suntan oil, linseed oil, salad oil, lubrication oil or grease. Oil affected items can ignite spontaneously, especially when exposed to heat sources such as in a tumble dryer. The items can become warm which is caused by oxidation reaction in the oil. Oxidation creates heat. If heat cannot escape, the items can become hot enough to ignite. Piling, stacking or storing oil-affected items can prevent heat from escaping and create a fire hazard. If it is unavoidable that fabrics that contain vegetable or cooking oil, or have been contaminated by hair care products be placed in a tumble dryer, they should first be washed in hot water with extra detergent-this will reduce, but not eliminate the hazard. The final part of tumble dryer cycle occurs without heat (Cooling cycle) to ensure that the items are left at the temperature that ensures that the items will not be damage.
- Items that have previously been cleaned in, washed in or spotted with petrol/gasoline, industrial chemicals used only for cleaning, dry-cleaning solvents, or other flammable or explosive substances are highly flammable. Highly flammable or explosives commonly found around the house include acetone (nail polish remover), denatured alcohol, petrol/gasoline, kerosene, some spot removers, turpentine, waxes, and wax removers should not be put in the dryer.

- Items containing foam rubber (also known as latex foam), similarly textured rubber, or materials e.g. shower caps, waterproof textiles, rubber-backed articles, and clothes or pillows fitted with foam rubber pads should not be dried in the machine on a heat setting. Foam rubber materials can produce fire by spontaneous combustion when heated.
- Rubber-backed articles, clothes fitted with foam rubber pads, pillows, rubber boots, and rubber-coated sports shoes.
- Fabric softeners, or similar products, should be used as specified by the fabric softener instructions.
- Remove all objects from pockets such as lighters and matches.

For your safety, and to reduce the risk of fire or an explosion, **DO NOT store or use petrol or other flammable vapours and liquids near your dryer**.

2. PRODUCT DESCRIPTION

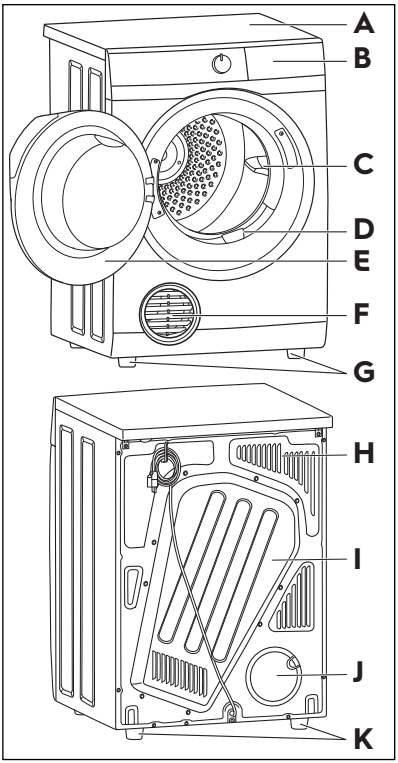

A	Work top
B	Control Panel
C	Drum lifter
D	Lint filter
E	Appliance door
F	Exhaust grille
G	Front feet
H	Air inlet duct
I	Back cover
J	Outlet cover
K	Back feet

⚠ WARNING!

Before proceeding with installation, read the safety information, and dimension preferred.

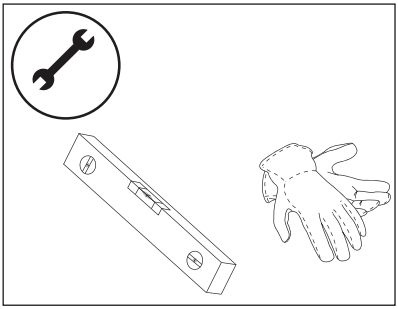

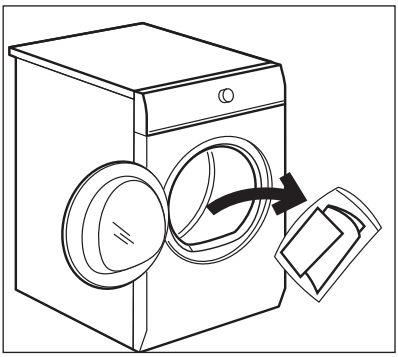

Positioning

You can choose to install the dryer on :

- a stable and levelled floor.
- upside down or upright.
- on a wall.

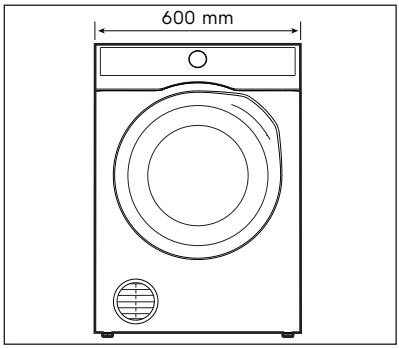

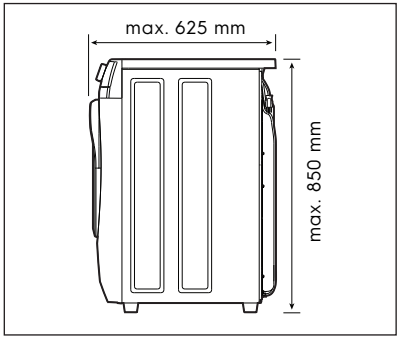

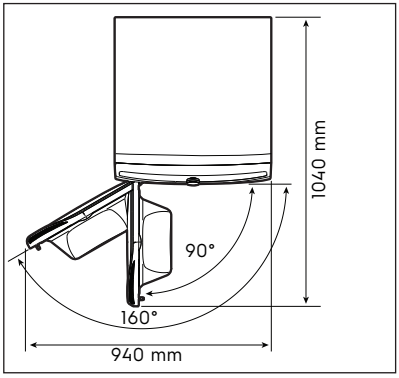

Your dryer can be inverted and mounted on the wall above a washer or tub.

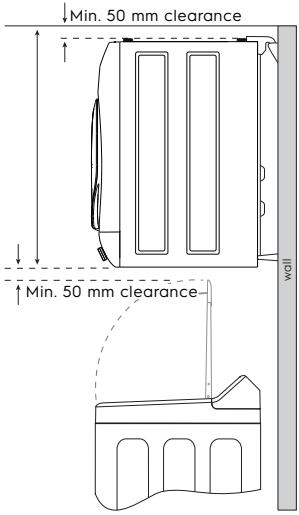

On the floor, Should be installed a minimum of 30 mm clearance from the wall.

Please contact the service centre if you need to purchase additional accessories for installing the machine on the wall or in inverted mode

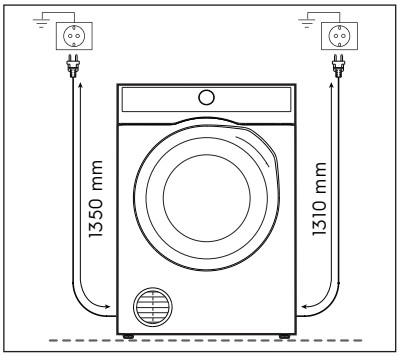

⚠ WARNING!

The Tumble Dryer cannot be placed directly on top of a washing machine without the use of an approved stacking kit.
For more information, please contact authorised dealer.

The exhaust grille has a range of positions, which allows you to select the optimum exhaust air angle. Simply hold the grille and rotate it until it hits the built-in stop.

Do not install your dryer in a cupboard or small un-vented laundry unless you are using a venting kit.

There are 2 venting options;

1. Front
2. Rear-using a venting kit

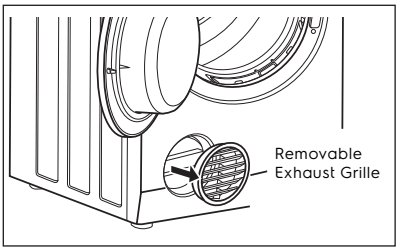

If you want to be purchased the optional extra, please contact your local retailer or service centre.

Venting Kit (Optional Extra)

DVK005K - Through the wall

DVK006 - Universal flexible hose

The exhaust duct must not exceed 2 meters in length at 100 millimetres in diameter.

If connecting the dryer to a common ducting system, safety advice should be requested from the manufacturer.

If you choose to use included kit, the exhaust grille at the front of the dryer will need to be replaced with the outlet cover from the back of the dryer. Gently prise open the grille, using a thin-bladed tool. Next, remove the cover from the back and clip it into the grille space at the front. The exhaust grille is not required when using a vent kit.

You can position the vent kit at the back of the dryer to remove air sideways and upwards.

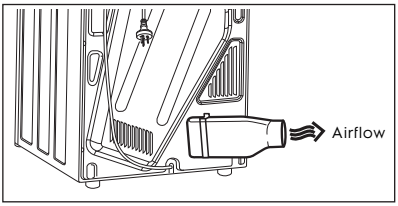

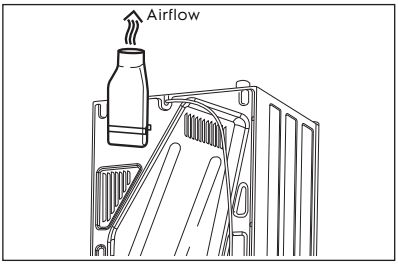

Inlet and outlet points need clear airflow to prevent overheating, so ensure there is adequate ventilation. (i.e. open window or external door.)

If a venting kit is used and the exhaust is discharged out of the room, there must be adequate ventilation to avoid the back flow of gases into the room from appliances burning other fuels, including open fires, when operating the tumble dryer. This is not applicable where a venting hose is directed to an open window.

The exhaust air must not be discharged into a flue pipe which is used for exhausting fumes from appliances burning gas or other fuels.

Important : Your dryer must stand firm and levelled on the floor to ensure correct operation. The appliance must not be installed behind cupboard doors which restricting the full opening of the dryer door.

Use a spirit level tool on the top and side of the dryer to check the levels.

If you have no access to a spirit level tool, use door frame, cupboard or bench as a guide to check that the dryer is levelled.

Never place cardboard, wood or similar materials under the machine to compensate for any unevenness in the floor. Install the machine on a flat hard floor.

Make sure that air circulation around the machine is not impeded by carpets, rugs etc.

Check that the machine does not touch the wall or cupboard units.

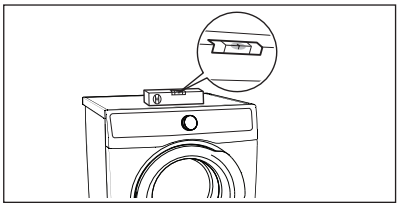

Inverted Mounting Mode

ⓘ The vented dryer allows for inverted wall mounting and you can set the dryer to an Inverted Mounting Mode through a hidden key combination (refer to the User Manual, chapter Control Panel). **Apply the inverted control panel sticker before use.**

ⓘ Please contact the service centre if you need to purchase the Wall Mounting Kit, which includes the inverted control panel sticker.

4. CONTROL PANEL

4.1 Control Panel Description

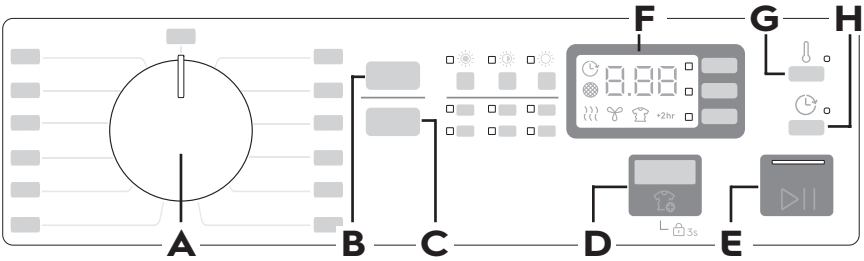

A Programme knob

B Dryness Level touch key

- Extra Dry
- Cupboard Dry
- Iron Dry

C Time Dry touch key

D Extra Anticrease touch key

- (Lock Option)

E ▷|| Start/Pause touch key

F Display

G Dry Temp touch key

H Delay Start touch key

ⓘ Press the touch buttons with your finger in the area with the symbol or name of the option. Do not wear gloves when you operate the control panel. Make sure that the control panel is always clean and dry.

4.2 Inverted Mounting Mode

The vented dryer allows for inverted wall mounting and you can set the dryer to an Inverted Mounting Mode through a hidden key combination.

This would adjust the display to read correctly when it is wall-mounted upside-down.

To set the appliance to Inverted mounting mode, press and hold the "Extra Anticrease" and "▷|| Start/Pause" touch key at the same time about 5 seconds, the display will be inverting digit number with the sound.

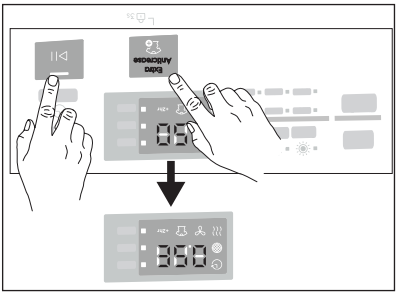

4.3 Display

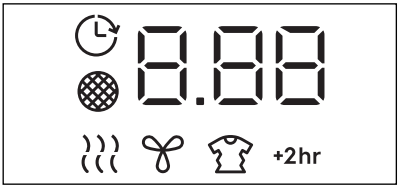

Symbol on the display	Symbol description
	Delay start option on.
	Indicator: clean filter The Clean Filter indicator turns on and blinks at the end of each dry cycle to serve as a reminder to user to clean lint filter at the end of each load.
	Indicator: drying phase
	Indicator: cooling phase After the drying process finish, Cooling process will operate and switch off heater. The Cooling indicator blink until finish cooling process. This process will release heat from the clothes and crease protection.
	Indicator: Anticrease phase The anticrease cycle is designed to help prevent creases forming in the clothes after programme drying cycle has ended. The anticrease progress indicator will start blinking with clean filter during the time anti crease phase is running. The drum will rotate for 5 seconds every minute and will go for 1 hour. **NOTE** Anticrease phase CANNOT BE DISABLED. **NOTE** Anticrease can be stopped at any time by opening the door and removing the clothes or press "▷|| Start/Pause" button.
+2hr	Extra anticrease on.

Symbol on the display	Symbol description
8.88	Digital Number; will show: • Drying cycle time. • Delay start time. • The alarm codes. Refer to the chapter "Troubleshooting" for their description.

5. PROGRAMME TABLE

Programme	Load [1]	Properties / Fabric type
Cottons	Max.	White and coloured cotton fabrics programme. Default setting is for ready to store dryness level.
Eco Cottons	Max.	Cotton fabrics programme designed for maximum energy saving.
Delicates	3.5 kg	Recommended for generic delicate fabrics such as viscose, rayon, acrylic and their blends.
Wool	1 kg	Woollen fabrics. Gentle drying for hand-wash-able woolens. Remove items immediately when the programme is completed.
Denim	4 kg	Deeply dries jeans and other denim garments, even in thick parts like pockets, seams, and cuffs reducing entanglement.
Easy Iron	3.5 kg	Easy care fabrics for which a minimum of ironing is necessary. The drying results can be different from one type of fabric to an other. Shake the items before putting them in the appliance. When the programme has ended, immediately remove the items and put them on a hanger.
Refresh	3-5 pcs. (dry items)	For dry clothes only. A short low-temperature cycle that helps in refreshing a small number of garments. It is also for dry clothes that have been in storage for a long time.
Bedding	Half	Dries up to three bed linen sets at once. Minimises twists and tangles of large items to ensure every bed linen reaches a uniform dryness without wet spots.
Sports	4 kg	Sportswear, thin and light fabrics, microfiber, polyester, which are not ironed.
Synthetics	3.5 kg	Blended garments containing mostly synthetic fibres like polyester, polyamide, etc.
MixedDry	Half	Designed for routine drying of what you wash without sorting. Dries evenly clothes made of cotton, cotton-synthetic blends and synthetic.
Fast 40	1 kg	Select this cycle to dry everyday fabrics, cotton or blended fabrics that need to be dried quickly.
Off	-	This position to reset programme/switching off the machine.

1) Maximum capacity depends on model of dryer.

6. OPTIONS AND SETTINGS

6.1 Option Table

Programme with Dryness Level Option Selected

1. Select "Dryness Level" option, then
2. Select "🌡 Dry Temp"

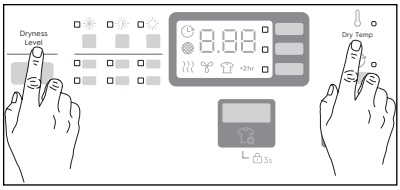

Programme	Dryness Level			Dry Temp			Extra Anticrease	Delay Start
	☀	☀	☀	Boost	Low	Airing		
Cottons	■	■	■	■	■		■	■
Eco Cottons	■			■			■	■
Delicates		■	■	■	■		■	■
Wool		■			■		■	■
Denim	■	■		■			■	■
Easy Iron		■	■	■			■	■
Refresh				■			■	■
Bedding	■	■	■	■	■		■	■
Sports		■		■			■	■
Synthetics	■	■	■	■	■		■	■
MixedDry	■	■	■	■	■		■	■
Fast 40	■			■			■	■
Off								

Programme with Time Dry Option Selected

1. Select "Time Dry (mins.)" option, then
2. Select "🌡 Dry Temp"

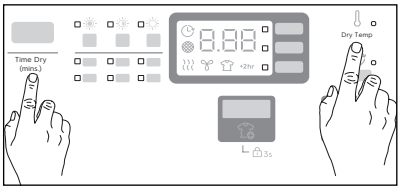

Programme	Time Dry (mins.)						Dry Temp			Extra Anticrease	Delay Start
	120	90	60	30	20	15	Boost	Low	Airing		
Cottons	■	■	■	■	■	■	■	■	■	■	■
Eco Cottons											
Delicates											
Wool											
Denim											
Easy Iron											
Refresh											
Bedding											
Sports											
Synthetics	■	■	■	■	■	■	■	■	■	■	■
MixedDry	■	■	■	■	■	■	■	■	■	■	■
Fast 40											
Off											

6.2 Dryness Level

This function helps to increase dryness of the laundry. There are 3 options:

1. Extra dry
2. Cupboard dry
3. Iron dry

Dryness Option Guidelines:

Level of dryness	Type of fabric	Load [1]
Extra Dry Ideal for towels or similar	Cotton and linen (bathrobes, bath towels, etc)	up to Max.
Cupboard Dry Suitable for items to put away without ironing	Cotton and linen (towels,T-shirts, underwear, etc)	up to Max.
	Synthetics and mixed fabrics (jumpers, blouses, underwear, household linen)	up to 3 kg
Iron Dry Suitable for ironing	Cotton and linen (sheets, tablecloths, shirts, etc.)	up to Max.

1) Maximum capacity depends on model of Dryer

"Dryness Level" settings are based on the programme selected.

6.3 Time Dry (mins)

You can set the programme duration of 15, 20, 30, 60, 90 and 120 minutes The required duration is related to the quantity of laundry in the appliance.

We recommend that you set a short duration for small quantities of laundry or for only one item.

Dry Time Option Guidelines:

Type of fabric	Load [1]	Suggested Times
Cotton and linen (bathrobes, bath towels, etc.).	5 kg to Max.	120 mins
	3 kg to 5 kg	60 mins to 90 mins
	1 kg to 3 kg	30 mins to 60 mins
	1 pc. to 1 kg	15 mins to 30 mins
Synthetic or mixed fabric items (jumpers, blouses, underwear, household linen, etc.).	Half	30 mins to 60 mins
	1 kg	15 mins to 20 mins
Wool and hand washable wool.	1 kg	15 mins to 30 mins

1) Maximum capacity depends on model of Dryer

6.4 Dry Temp

This function gives you the option of selecting different drying levels. There are 3 levels:

- **Boost**
  For drying most fabrics.
- **Low**
  For drying delicates and synthetics at lower heat for maximum care of the fabrics. The Low Heat setting will cause the heater to cycle on for shorter time than the "Boost" setting.
- **Airing**
  This setting does not heat. ONLY circulate the air in the dryer to shake out dust and refresh clothes and only available in "Time Dry (mins.)" option.

6.5 Delay Start

This option makes it possible to delay the start of the programme by 30 mins, 60 mins or 90 mins and then by every hour from 2h to 20h The delay you have selected is indicated on the display. The end time will increase in order to show you the selected delay.

You must select this option after you have set the programme and before you press the "▷II Start/Pause" button. If you wish to add laundry in the machine during the delay time, press "▷II Start/Pause" touch key to put the machine in pause mode. Add laundry, close the door and press "▷II Start/Pause" touch key again.

You can cancel or change the delay time at any moment, by pressing "▷II Start/Pause" touch key then press "Delay Start" touch key once, time will reset to "0", now you can change the time or cancel it, press the "▷II Start/Pause" touch key again to continue operating the machine.

6.6 Extra Anticrease

This option extends the anticrease phase by 2 hours at the end of the drying cycle. This function reduces creases. The laundry can be removed during the anticrease phase. The display will shows "**+2hr** " when this option is selected.

6.7 Child Lock Function

This option prevents children playing with the appliance while a programme is operating. The touch buttons are locked.

- To activate the function, press and hold "Extra Anticrease" touch keys about 3 seconds until the display shows the icon "LOC".

> ⓘ If you press any touch key while Child Lock is activated, the icon "LOC" will flash on display 3 times along with buzzer sound.

- To deactivate the function, press and hold this touch keys at the same time until the display shows the icon "unL".

6.8 Enabling/Disabling End-Of- Dry Buzzer

This setting permits you to either enable or disable the buzzer at the end of the programme. As an example, you might wish to disable this buzzer when you start a drying when going to bed, so that when the cycle finished it will not disturb you through the night.

> ⓘ Error warning beeps such as critical faults are not disabled.

- To disable the buzzer sound, press "Dryness Level" and "Time Dry (mins.)" touch keys at the same time for 3 seconds, the display will show "bOF" with the sound.
- To return to default configuration press these 2 touch keys at the same time for 3 seconds, the display will show "bOn" with the sound.

7.1 Start a programme without delay start

1. Prepare the laundry and load the appliance. For best result we recommend to sort out your laundry according to fabric type and spin dry at highest speed available in your washing machine.

ⓘ Load your dryer loosely until it is no more than TWO THIRDS FULL. Clothes must tumble freely in a dryer. Don't cram them in. Wet clothes fluff up when dry.

ⓘ Overloading will:
- reduce efficiency
- Increase drying time
- Increase the risk of creasing.

ⓘ Do not load clothes or other articles which are dripping wet or have sand and grit on them into your dryer.

2. Turn the Programme Selector knob to choose drying programme.
3. Set the correct programme and options for the type of load. The display shows the programme duration.

ⓘ Do not select the "☼ ExtraDry" option for delicate fabrics such polyester as shrinking may occur.

ⓘ To obtain the best drying results with small loads it is recommended to use "Time Dry (mins.)"programme.

4. Press the "▷II Start/Pause" touch key. The programme starts.

ⓘ Never stop a tumble dryer before the end of the drying cycle unless all items are quickly removed and spread out so that the heat is dissipated.

7.2 Starting the programme with delay start

1. Set the correct programme and options for the type of load.
2. Press the "🕒 Delay Start" touch key again and again until the display shows the delay time you want to set.
3. Press the "▷II Start/Pause" touch key. The display shows the countdown of the delay start. When the countdown is completed, the programme starts.

ⓘ Should the laundry still be too wet at the end of the programme, set another short drying cycle.

⚠ **WARNING!**
To prevent the formation of creases or shrinking of fabrics, avoid excessive drying.

7.3 Change a programme

Changing a running programme is possible only by resetting it.

1. Turn the programme selector knob to the position "Off" to cancel the programme and to turn off the appliance.
2. Turn the programme selector knob to the new programme position and set the new option, then press "▷II Start/Pause" touch key again.

7.4 Interruption of a programme

1. To pause, press "▷II Start/Pause" touch key. The LED indicator will start flashing.
2. Press the "▷II Start/Pause" touch key again. The programme will continue.

7.5 At the end of the programme

Changing a running programme is possible only by resetting it.

- The appliance stops automatically.
- The acoustic signal will operate.
- The display shows " End "
- The indicator "" is on.
- The indicators "" filter may come on.
- The indicator "▷||" is on. The appliance continues to operate with the anticrease phase for approximately 1 hour or more if "Extra Anticrease" option was set (see chapter Option "Extra Anticrease").

ⓘ The anticrease phase reduces creasing. You can remove the laundry before the anticrease phase is completed. We recommend, for better results, that you remove the laundry when the phase is almost completed.

ⓘ Always clean the filter when a programme is completed.

7.6 Stand-by function

To reduce energy consumption, this function automatically deactivates the appliance:

- After 5 minutes if you do not start the programme.
- After 5 minutes from the end of the programme.

8. DRYING HINTS

ⓘ Always clean the filter when a programme is completed.

8.1 Preparing the laundry

- Never tumble dry the following: Delicate items such as net curtains, woollen, silk, fabric with metal trim, nylon tights, bulky materials such as anoraks, blankets, eiderdown, sleeping bags, feather quilts and any item containing rubber foam or materials similar to foam rubber.
- Do not place in your dryer undergarments such as bras and corsets that contain metal reinforcements. Your dryer may be damaged if metal parts were to come loose from the garment. Place such items in a bag designed for this purpose.
- Check and empty pockets. Clips, pens, nails and pins can damage both the dryer and your clothes. Other items such as matches or cigarette lighters will cause a fire.
- Close all press studs, hooks, eyes and zips that may catch on something else. Tie all belts and apron strings to prevent tangling.
- Drying time will depend on fabric type and construction, load size and wetness. Save time and money and always spin the load as dry as possible in your washing machine.
- Drying time will also be affected by voltage fluctuations, room temperature and humidity. Clothes will dry more slowly on a cool or humid day.
- For best results, sort the load according to fabric types. Such as heavy items which may take longer to dry, eg towels, flannelette sheets etc, than ones which dry quickly, eg poly/cotton shirts and sheets.
- Avoid drying dark clothes with light coloured items such as towels as lint will show on the dark clothes.

Note: Some fabrics will collect lint from other clothes and items. Separate the lint "givers" and the lint "collectors" to minimise this problem.

- Clothes that give lint include towels, nappies, chenille.
- Clothes that collect lint include corduroy, synthetics and permanent press garments.
- If individual items are still damp after drying, please add appropriate "Time Dry (mins.)" programme. This may be necessary particularly for multilayered items (e.g. jeans, items with collars or pocket) or very small loads
- Always clean the lint filter-this will reduce drying time and save you money.
- The laundry must be thoroughly spun before tumble drying.
- Easy-care items eg shirts, should be briefly pre-spun before drying (depending on the crease resistance approximately 30 seconds)
- To avoid static charge when drying is completed, use either a fabric softener when you are washing the laundry or a fabric conditioner specifically for tumble dryers.
- Remove the laundry when the dryer has finished drying.
- Do not over-dry laundry, this avoids creasing and saves energy.
- Clothes or towels containing sand or grit should be washed first.
- Due to variations in dryer load fabric texture and thickness it is possible that not all items will be dried evenly. It you experience uneven dryness on "☼ Cupboard Dry" programme please use either "☼ ExtraDry" or "Time Dry (mins.)" but be mindful of the type of fabric being dried to avoid over drying certain types of fabric. Always follow drying instructions attached to the items intended to be dried in a clothes dryer. To help you, here is a list of the average weights of some common laundry items.

Sheet	700g - 1000g
Tablecloth	400g - 500g
Kitchen towel	70g - 120g
Table napkin	50g - 100g
Towelling hand towel	150g - 250g
Bathrobe	1000g - 1500g
Men's shirt	200g - 300g
Pillowcase	100g - 200g
Men's pyjamas	400g - 500g
Ladies nightdress	200g 250g
Bath towel	300g - 400g

8.2 Guide

Always check your labels for the drying symbol which this international Care Labelling Code now uses.

Fabric label	Description
	Laundry is suitable for tumble drying.
	Laundry is suitable for tumble drying at higher temperatures.
	Laundry is suitable for tumble drying at low temperatures only.
	Laundry is not suitable for tumble drying.

- **Permanent press and synthetics**
  - take out as soon as the dryer stops to reduce wrinkles.
- **Woollen articles**
  - not recommended. Pull them to their original shape, then dry them flat.
- **Woven and loop knit materials**
  - may shrink, by varying amount, depending on their quality. Do not use the "☼ ExtraDry" setting for these fabrics, Always stretch them out immediately after drying.
- **Fibre or leather materials**
  - always check the manufacturer's instructions.
- **Baby clothes and night gowns**
  - acrylic clothing or sleepwear use only on the "☼ Iron Dry" setting.
- **Rubber and plastics**
  - Do not dry any items made from or containing rubber or plastics, such as aprons, bibs, babies' water proof napkins, curtains, tablecloths, shower caps, clothes fitted with foam rubber pads, pillows, galoshes, or rubber coated tennis shoes.
- **Fibreglass**
  - not recommended, glass particles left in the dryer could be picked up by your clothes the next time you use the dryer and irritate your skin.
- Fabric softeners or similar products should not be used in a tumble dryer to eliminate the effects of static electricity unless this practise is specifically recommended by the manufacturer of the fabric softener or product.

ⓘ We strongly advise against the use of fabric conditioners of the sheet type that are added to the clothes in the drum. These products may lead to rapid blockage of the lint filter and inefficient operation of your dryer.

9.1 Cleaning the lint filter

ⓘ **LINT BUILD-UP IS A FIRE HAZARD**
A clean lint filter reduces drying times, saves energy and avoids overheating. Overheating may also damage your clothes.

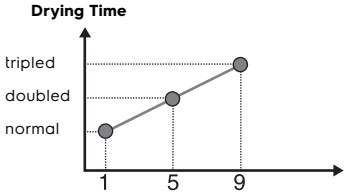

Number of usages with an unclean lint filter (based on laboratory tests using a load of new towels)

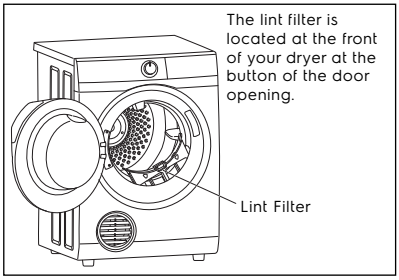

It is important to clean the lint filter after every load.

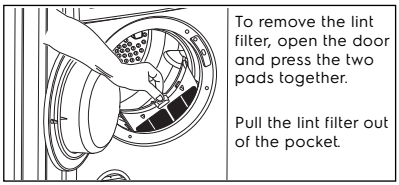

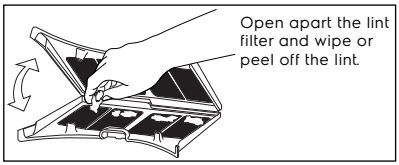

Ensure that you hear a "Click" when putting back the lint filter.

- Never operate your dryer without the lint filter.
- Do not allow lint to build around your dryer.
- A torn or damaged lint filter must be replaced immediately.
- Overloading can increase lint build-up because the airflow is reduced.

To avoid potential fire hazards, we recommend that you pay a authorized service centre. To periodically clean your dryer, You must do this also when you change mounting from upright to inverted, or vice versa.

9.2 Cleaning the drum

⚠ **WARNING!**
Disconnect the appliance before you clean it.

Use a standard neutral soap detergent to clean the inner surface of the drum and drum lifters. Dry the cleaned surfaces with a soft cloth.

⚠ **CAUTION!**
Do not use abrasive materials or steel wool to clean the drum.

9.3 Cleaning the control panel

Use a standard neutral soap detergent to clean the control panel. Use a moist cloth to clean. Dry the cleaned surfaces with a soft cloth.

⚠ **CAUTION!**
Do not use furniture cleaning agents or cleaning agents which can cause corrosion.

10. TROUBLESHOOTING

10.1 Troubleshooting

Malfunction	Alarm Code	Possible cause	Solution
• Machine does not start	E40	• The appliance door is open or not closed correctly.	• Close the door firmly.
	E10	• The mains supply is unstable.	• Wait until the main supply is stable then press start.
	E91	• Internal fail. No communication between electronic elements of the appliance.	• Switch off and switch on again.

Problem	Possible solution
You cannot activate the appliance.	Make sure that the mains plug is connected to the mains socket.
	Check fuse in fuse box (domestic installation).
The programme does not start.	Press "▷II Start/Pause".
	Make sure that the appliance door is closed.
The appliance door does not close.	Make sure that the installation of the filter is correct.
	Make sure that the laundry is not caught between the appliance door and the rubber seal.
The appliance stops during operation.	Load is too small, increase the load or use the "Time Dry (mins.)" programme.
The cycle time is too long or unsatisfactory drying result.	Make sure that the weight of the laundry is suitable for the duration of the programme.
	Make sure that the filter is clean.
	The laundry is too wet. Spin the laundry in the washing machine again.
	Ensure that the room temperature is higher than +5°C and lower than +35°C. Optimal room temperature is 19°C to 24°C.
	Set the "Time Dry (mins.)" or the "☼ ExtraDry" programme. (It can happen that some area remains humid when drying big items (e.g. bed sheets))
The display shows ▬ ▬ ▬.	If you want to set a new programme, deactivate and activate the appliance.
	Make sure that the options are suitable for the programme.

10.2 If the drying results are not satisfactory

- The set programme was incorrect.
- The filter is clogged.
- There was too much laundry in the appliance.
- The drum is dirty.
- Room temperature is too low or too high (optimal room temperature 19°C to 24°C)

11. TECHNICAL DATA

Model Name	EDV804H3WC
Dimension (Height x Width x Depth)	850 x 600 x 625 mm
Power Supply (Voltage / Frequency)	220-240 V / 50 Hz
Heater Power (Watt)	1500 W
Drum volume	102 litres
Maximum Capacity	8 kg
Type of use	Household
Level of protection against ingress of solid particles and moisture ensured by the protective cover, except where the low voltage equipment has no protection against moisture	**IPX4**

Model Name	EDV904H3WC, EDV904N3SC
Dimension (Height x Width x Depth)	850 x 600 x 625 mm
Power Supply (Voltage / Frequency)	220-240 V / 50 Hz
Heater Power (Watt)	1500 W
Drum volume	102 litres
Maximum Capacity	9 kg
Type of use	Household
Level of protection against ingress of solid particles and moisture ensured by the protective cover, except where the low voltage equipment has no protection against moisture	**IPX4**

12. ENVIRONMENT CONCERNS

12.1 Packaging Materials

The materials marked with the symbol ♲ are recyclable.

>PE<=polyethylene

>PS<=polystyrene

>PP<=polypropylene.

This means that they can be recycled by disposing them properly in appropriate collection containers.

12.2 Old Machine

Use authorized disposal sites for your old appliance. Help to keep your country tidy!

The symbol on the product or on its packaging indicates that this product may not be treated as household waste.

Instead it shall be handed over to the applicable collection point for the recycling of electrical and electronic equipment. By ensuring this product is disposed of correctly, you will help prevent potential negative consequences for the environment and human health, which could otherwise be caused by inappropriate waste handling of this product.

For more detailed information about recycling of this product, please contact your local city office, your household waste disposal service or the shop where you purchased the product.

electrolux.com

G0043816-003-A28646401