AEG

aeg.com/register

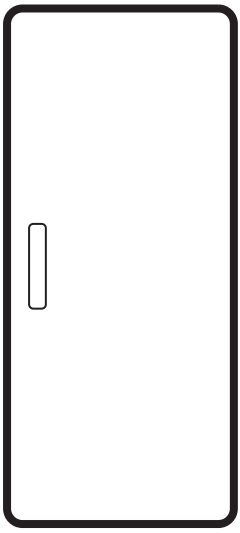

NK9CS181EC

INSTALLATION

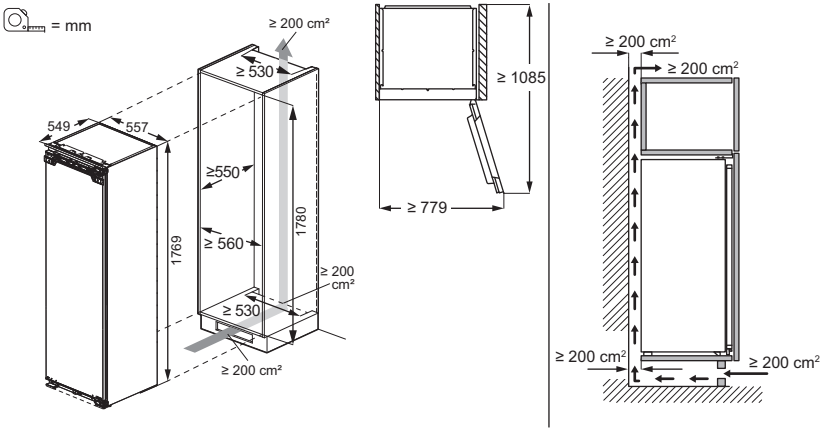

NOISES



ENGLISH

1. SAFETY INFORMATION..... **2**
2. SAFETY INSTRUCTIONS..... **4**
3. CONTROL PANEL..... **6**
4. DAILY USE..... **7**
5. HINTS AND TIPS..... **8**
6. CARE AND CLEANING..... **9**
7. TROUBLESHOOTING..... **9**
8. TECHNICAL DATA..... **9**
9. INFORMATION FOR TEST INSTITUTES **10**
10. ENVIRONMENTAL CONCERNS..... **10**

Subject to change without notice.

1. ⚠ SAFETY INFORMATION

Before the installation and use of the appliance read the supplied instructions carefully. The manufacturer is not responsible for any injuries or damage that result from in-

correct installation or usage. Always keep the instructions in a safe and accessible location for future reference.

1.1 Children and vulnerable people safety

- This appliance can be used by children aged from 8 years and above and persons with reduced physical, sensory or mental capabilities or lack of experience and knowledge if they have been given supervision or instruction concerning the use of the appliance in a safe way and understand the hazards involved. Children aged from 3 to 8 years and persons with very extensive and complex disabilities are allowed to load and unload the appliance provided that they have been properly instructed. Children of less than 3 years of age should be kept away from the appliance unless continuously supervised.
- Children should be supervised to ensure that they do not play with the appliance.
- Children shall not carry out cleaning and user maintenance of the appliance without supervision.
- Keep all packaging away from children and dispose of it appropriately.

1.2 General Safety

- This appliance is for storing food and beverages only.
- This appliance is designed for single household domestic use in an indoor environment.
- This appliance may be used in, offices, hotel guest rooms, bed & breakfast guest rooms, farm guest houses and other similar accommodation where such use does not exceed (average) domestic usage levels.
- To avoid contamination of food respect the following instructions:
  - do not open the door for long periods;
  - clean regularly surfaces that can come in contact with food and accessible drainage systems;
  - store raw meat and fish in suitable containers in the refrigerator, so that it is not in contact with or drip onto other food.
- WARNING: Keep ventilation openings, in the appliance enclosure or in the

built-in structure, clear of obstruction.
- WARNING: Do not use mechanical devices or other means to accelerate the defrosting process, other than those recommended by the manufacturer.
- WARNING: Do not damage the refrigerant circuit.
- WARNING: Do not use electrical appliances inside the food storage compartments of the appliance, unless they are of the type recommended by the manufacturer.
- WARNING: When positioning the appliance, ensure the supply cord is not trapped or damaged.
- WARNING: Do not locate multiple portable socket-outlets or portable power supplies at the rear of the appliance.
- Do not use water spray and steam to clean the appliance.
- Clean the appliance with a moist soft cloth. Only use neutral detergents. Do not use abrasive products, abrasive cleaning pads, solvents or metal objects.
- When the appliance is empty for long period, switch it off, defrost, clean, dry and leave the door open to prevent mould from developing within the appliance.
- Do not store explosive substances such as aerosol cans with a flammable propellant in this appliance.
- If the supply cord is damaged, it must be replaced by the manufacturer, its authorised service centre or similarly qualified persons in order to avoid a hazard.

2. SAFETY INSTRUCTIONS

2.1 Installation

⚠ **WARNING!**
Only a qualified person must install this appliance.

- Remove all the packaging.
- Declared energy consumption is based on a 560 mm cabinet depth, it may be higher at 550 mm depth.
- Do not install or use a damaged appliance.
- Do not use the appliance before installing it in the built-in structure due to safety manner.
- Follow the separate instructions for the installation and door reversing supplied with the appliance or available on our website.
- Always take care when moving the appliance as it is heavy. Always use safety gloves and enclosed footwear.
- Make sure the air can circulate around the appliance.
- At first installation or after reversing the door, wait at least 4 hours before

connecting the appliance to the power supply. This is to allow the oil to flow back in the compressor.
- Before carrying out any operations on the appliance (e.g. reversing the door), remove the plug from the power socket.
- Do not install the appliance close to radiators or cookers, ovens, or hobs, unless otherwise specified in the installation instructions.
- Do not expose the appliance to the rain.
- Do not install the appliance where there is direct sunlight.
- Do not install this appliance in areas that are too humid or too cold.
- When you move the appliance, lift it by the front edge to avoid scratching the floor.
- Protect the floor from scratches when reversing the appliance door.
- The appliance contains a bag of desiccant. This is not a toy. This is not food. Please dispose of it immediately.

2.2 Electrical connection

⚠ WARNING!
Risk of fire and electric shock.

⚠ CAUTION!
Any electrical work required to install this appliance should be carried out by a qualified electrician.

- Make sure that the parameters on the rating plate are compatible with the electrical ratings of the mains.
- The appliance must be earthed.
- Always use a correctly installed shockproof socket.
- If the domestic power supply socket is not earthed, connect the appliance to a separate earth in compliance with current regulations, consulting a qualified electrician.
- Make sure not to cause damage to the electrical components (e.g. mains plug, mains cable, compressor). Contact our Service Centre or an electrician to change the electrical components.
- The mains cable must stay below the level of the mains plug.
- Connect the mains plug to the mains socket only at the end of the installation. Make sure that there is access to the mains plug after the installation.
- Do not disconnect the appliance by pulling on the mains cable. Always pull on the mains plug.
- This appliance is fitted with a 13 A mains plug. If it is necessary to change the mains plug fuse, use only a 13 A ASTA (BS 1362) fuse (UK and Ireland only).

2.3 Use

⚠ WARNING!
Risk of injury, burns, electric shock or fire.


The appliance contains flammable gas, isobutane (R600a), a natural gas with a high level of environmental compatibility. Be careful not to cause damage to the refrigerant circuit containing isobutane.

- Do not modify this appliance.
- Any use of the built-in product as free-standing is strictly prohibited.
- This appliance is intended to be used at ambient temperature ranging from 10°C to 38°C. The specified temperature range guarantees the correct operations of the appliance.
- Do not put electrical appliances (e.g. ice cream makers) in the appliance unless they are stated applicable by the manufacturer.
- If damage occurs to the refrigerant circuit, make sure that there are no flames and sources of ignition in the room. Ventilate the room.
- Do not let hot items to touch the plastic parts of the appliance.
- Do not store flammable gas and liquid in the appliance.
- Do not put flammable products or items that are wet with flammable products in, near or on the appliance.
- Do not touch the compressor or the condenser. They are hot.
- Do not allow food to come in contact with the inner walls of the appliance compartments.

2.4 Internal lighting

⚠ WARNING!
Risk of electric shock.

- This product contains one or more light sources of energy efficiency class F.
- Concerning the lamp(s) inside this product and spare part lamps sold separately: These lamps are intended to withstand extreme physical conditions in household appliances, such as temperature, vibration, humidity, or are intended to

signal information about the operational status of the appliance. They are not intended to be used in other applications and are not suitable for household room illumination.

2.5 Care and cleaning

⚠ WARNING!
Risk of injury or damage to the appliance.

- Before maintenance, deactivate the appliance and disconnect the mains plug from the mains socket.
- This appliance contains hydrocarbons in the cooling unit. Only a qualified person must do the maintenance and the recharging of the unit.
- Check the product regularly for signs of deterioration that may make it unsuitable for food contact, such as cracks, blisters, delamination, shrinkage, stickiness, corrosion, or other visible changes in texture or appearance. Follow cleaning and care instructions to prevent deterioration.

2.6 Service

- To repair the appliance contact the Authorised Service Centre. Use only original spare parts.
- Please note that self-repair or non-professional repair can have safety consequences and might void the guarantee.
- The following spare parts are available for at least 7 years after the model has been discontinued: thermostats, temperature sensors, printed circuit boards, light sources, door handles, door hinges, trays and baskets. Door gaskets are available for at least 10 years after the model has been discontinued. The duration may be longer in your country. For further information, please visit our website.
- Please note that some of these spare parts are only available to professional repairers, and that not all spare parts are relevant for all models.

2.7 Disposal

⚠ WARNING!
Risk of injury or suffocation.

- Disconnect the appliance from the mains supply.
- Cut off the mains cable and discard it.
- Remove the door to prevent children and pets to be closed inside of the appliance.
- The refrigerant circuit and the insulation materials of this appliance are ozone-friendly.
- The insulation foam contains flammable gas. Contact your municipal authority for information on how to discard the appliance correctly.
- Do not cause damage to the part of the cooling unit that is near the heat exchanger.

3. CONTROL PANEL

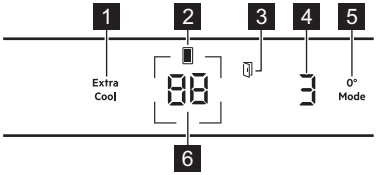

1 **Extra Cool button / indicator**
Press to activate/deactivate.

2 **Fridge compartment indicator**

3 **Door open alarm indicator**
Press any button to switch off the sound. The alarm stops after closing the door.

4 **0° Mode indicator**

5 **0° Mode button**

6 **Fridge temperature button / indicator**
Press to set the fridge temperature (3°C °C – 8°C°C; recommended 4°C).

ⓘ The set temperature will be reached within 24 h.
After a power failure, the appliance restores the previously set temperatures.

3.1 Switching on/off

The appliance

Switching on: Connect the mains plug to the power socket.

Switching off: Press and hold the fridge temperature button for 5 sec. Disconnect the mains plug from the power socket.

3.2 Extra Cool function

Use Extra Cool to rapidly cool warm food in the fridge compartment.

The fan can activate when the function is on. Switch off the function to set a different fridge temperature. The function stops after approx. 6 h.

3.3 0° Mode settings

The 0° Mode allows you to set different temperature levels in the LongFresh compartment.

The default and warmest setting is **9**, the coldest setting is **1**.

To change the setting, tap 0° Mode button until you select the desired temperature level.

ⓘ Settings from 1 to 5 are suitable for fish and meat. Settings from 6 to 9 are suitable for fruit and vegetables, compartment works similarly to the fridge compartment.

3.4 Alarms

Press any button to deactivate the sound and flashing of the internal fridge light. The sound switches off automatically after 1h.

Door open alarm

It activates when the fridge door is left open for 5 min.

Close the door to stop the alarm.

3.5 Setting mode

It enables you to change the settings: Demo mode, temperature units. You can also reset the appliance to factory settings:

Activating the Setting mode

1. Press and hold the Extra Cool button for approx. 3 sec to activate/deactivate the Setting mode. The display alternately shows blinking "SE" and "tt".
2. Once the Setting mode is active, the display alternately shows "tS" and "on".

The Setting mode deactivates if you do not interact with the control panel for 60 sec.

Navigating the Setting mode

Tap the Extra Cool to change the **setting parameter**. Tap the fridge temperature button to change the setting parameter **value**.

Setting name	Setting parameter	Values
Button sounds	tS	On/OF
Temperature units	CF	°C/°F
Demo mode[1)]	dE	On/OF
Factory settings	FS	on>03

[1)] You can not store food when Demo Mode is on.

4. DAILY USE

⚠ **CAUTION!**
This refrigerating appliance is not suitable for freezing foodstuffs.

4.1 LongFresh compartment

The temperature and the relative humidity in the compartment provide optimal conditions for the storage of fresh food (fish, meat, seafood, etc.).

To learn about the temperature settings, please refer to the “0° Mode settings” section.

4.2 Humidity control

The LongFresh compartment has stops that prevent the drawer from falling out when fully extended. To remove the drawer:

1. Pull the drawer to the maximum.
2. Lift and pull out the drawer.



The drawers marked with symbols: MAX and MIN can be used according to the desired storage conditions independently of each other.

Humidity setting is independent for each drawer and controlled with the slide valve at the front.

- “Dry”: low relative humidity.
  This humidity level is reached when both sliders are set to MIN and the ventilation openings are wide open.
- “Humid”: high relative humidity.

This humidity level is reached when both sliders are set to MAX and the ventilation openings are closed. Humidity is kept inside.

4.3 MULTIFLOW

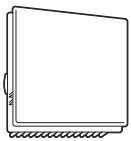

The MULTIFLOW fan activates automatically and operates only when the door is closed.

ⓘ Do not block the air vents.

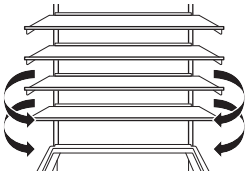

ⓘ Do not remove the MULTIFLOW panel. For cleaning instructions, refer to the "Care and cleaning" chapter.

5. HINTS AND TIPS

5.1 Optimization tips

- The configuration with the drawers in the bottom part of the appliance and shelves evenly distributed ensures the most efficient use of energy. Position of the door bins does not affect energy consumption.
- Do not open the door frequently or leave it open longer than necessary.
- Do not set too high temperature unless it is required by the characteristics of the food.
- Do not cover the ventilation grilles or holes.
- Ensure that food products inside the appliance allow air circulation through holes in the rear interior of the appliance.

5.2 Hints for food refrigeration

ⓘ Fresh food compartment is marked with .

- Good temperature setting that ensures preservation of fresh food is a temperature less than or equal to +4°C.
- Always use closed containers for liquids and for food, to avoid flavours or odours in the compartment.
- To avoid the cross-contamination between cooked and raw food, cover the cooked food and separate it from the raw one.
- Wrap and place meat on the glass shelf above the vegetable drawer.
- Defrost the food inside the fridge.
- Do not insert hot food inside the appliance.
- Clean fruit and vegetables and place in a dedicated drawer (vegetable drawer).
- Do not keep exotic fruits in the fridge.
- Do not keep vegetables like tomatoes, potatoes, onions, and garlic in the fridge.
- Close the bottles before you put them into the fridge.

5.3 Hints for fresh food storage in LongFresh drawer

The LongFresh drawer is marked with MAX and MIN.

Type of food	Air humidity adjustment
Meat and fish	MIN “dry”
Fruit and vegetables	MAX “humid”

Do not store cakes with creams more than 3 days.

Food not mentioned above should be stored in the refrigerator compartment (cheese, cold cuts, etc.).

ⓘ Air humidity in the drawers depends on the food humidity and the frequency of door opening.

The drawer is suitable for slow thawing of food. Store the thawed food in the drawer no longer than two days.

Take all food stored in the drawer out 15-30 min before consumption.

6. CARE AND CLEANING

6.1 Cleaning the interior

Before first use clean the interior and accessories with lukewarm water and neutral soap, then dry. Clean the equipment and door gaskets regularly.

Clean the control panel with a damp cloth and dry it with a soft cloth. Do not use any detergents.

ⓘ Do not wash the accessories and appliance parts in a dishwasher.

6.2 Defrosting the appliance

Fridge:

Defrosting of the fridge compartment is automatic.

7. TROUBLESHOOTING

The appliance does not operate.

- Connect the mains plug to the mains socket correctly.
- Switch on the appliance.
- Ensure there is voltage in the mains socket. Contact a qualified electrician.

The appliance is noisy.

Check if the appliance is supported properly.

Acoustic or visual alarm is on.

Close the door or press any button to deactivate acoustic alarm.

The compressor operates continually.

- Adjust the temperature.
- Wait for the temperature to stabilize.
- Allow food to cool to room temperature before storing.
- Close the door correctly.

Door is misaligned or interferes with ventilation grill.

Refer to installation instructions.

Door does not open easily.

Wait a few seconds between closing and reopening of the door.

There is too much frost and ice.

- Close the door correctly.
- Clean or replace the gasket.
- Wrap the food properly.
- Adjust the temperature.

Water flows on the rear plate of the refrigerator.

This is a part of defrosting process.

There is too much condensed water inside the fridge.

- Open the door only when necessary and close it completely.
- Set the warmer temperature in the refrigerator (approx. 6-7°C) in summer and autumn.

Temperature cannot be set.

Switch off Extra Cool function.

dE on appears on the display.

- Refer to the "Demo mode" in "Setting mode" section.

Er CE, the alarm indicator is on.

Contact the Authorised Service Centre. The cooling system keeps food cold. Temperature adjustment is disabled.

Er t1 or Er t3 or Er t5 alternately with the current setting, the alarm indicator is on.

Contact the Authorised Service Centre. The cooling system keeps food cold. Temperature adjustment is disabled.

The lamp does not work or the door gaskets are damaged.

Contact the Authorised Service Centre.

8. TECHNICAL DATA

The technical information is on the energy label and on the appliance rating plate, which may be located on or inside the appliance.

The QR code on the EU and UK energy labels supplied with the appliance provide a web link to the information related to the per-

formance of the appliance. For the energy label with the EU flag, it is also possible to find the information in the EU EPREL database using the link *https://eprel.ec.europa.eu* and the model name and product number that you find on the rating plate of the appliance. Keep the energy labels for reference together with the user manual and all other documents provided with this appliance.

9. INFORMATION FOR TEST INSTITUTES

Installation and preparation of the appliance for Ecodesign verification must comply with EN 62552 (EU, Switzerland and UK). Refer to Installation for ventilation requirements, recess dimensions, and minimum rear clearances. Contact the Authorised Service Centre for any further information.

10. ENVIRONMENTAL CONCERNS

Recycle materials with the symbol ♺. Put the packaging in relevant containers to recycle it. Help protect the environment and human health by recycling waste of electrical and electronic appliances. Do not dispose of appliances marked with the symbol with the household waste. Return the product to your local recycling facility or contact your municipal office.



222388759-A-462026