AEG

aeg.com/register



LFE50144B

EN User Manual | **Washing Machine**

Welcome to AEG! Thank you for choosing our appliance.



In our drive to be sustainable, we are reducing paper assets and provide full user manuals online. Access your full user manual at **aeg.com/manuals**



Get usage advice, brochures, troubleshooting, service and repair information at **aeg.com/support**



Buy accessories, consumables, and original spare parts for your appliance at **aeg.com/shop**

Subject to change without notice.

CONTENTS

1. SAFETY INFORMATION 2
2. SAFETY INSTRUCTIONS 4
3. PRODUCT DESCRIPTION 6
4. TECHNICAL INFORMATION 7
5. INSTALLATION 7
6. CONTROL PANEL 11
7. DIAL AND BUTTONS 12
8. PROGRAMMES 14
9. SETTINGS 17
10. DAILY USE 18
11. CARE AND CLEANING 21
12. CONSUMPTION VALUES 26
13. QUICK GUIDE 28
14. ALARM CODES AND POSSIBLE FAILURES 31
15. ENVIRONMENTAL CONCERNS 32

1. ⚠ SAFETY INFORMATION



Before beginning the installation and use of this appliance, carefully read the supplied instructions.
The manufacturer is not responsible for any injuries or damage that are the result of incorrect installation or usage.
Always keep the instructions in a safe and accessible location for future reference.

1.1 Children and vulnerable people safety

- This appliance can be used by children aged from 8 years and above and persons with reduced physical, sensory or mental capabilities or lack of experience and knowledge if

they have been given supervision or instruction concerning the use of the appliance in a safe way and understand the hazards involved.
- Children between 3 and 8 years of age and persons with very extensive and complex disabilities shall be kept away from the appliance unless continuously supervised.
- Children of less than 3 years of age should be kept away from the appliance unless continuously supervised.
- Children should be supervised to ensure that they do not play with the appliance.
- Keep all packaging away from children and dispose of it appropriately.
- Keep detergents away from children.
- Keep children and pets away from the appliance when the door is open.
- If the appliance has a child safety device, it should be activated.
- Children shall not carry out cleaning and user maintenance of the appliance without supervision.

1.2 General Safety

- This appliance is for washing domestic-type, machine-washable laundry only.
- This appliance is designed for single household domestic use in an indoor environment.
- This appliance may be used in offices, hotel guest rooms, bed & breakfast guest rooms, farm guest houses and other similar accommodation where such use does not exceed (average) domestic usage levels.
- Do not change the specification of this appliance.
- The appliance maximum load is 10 kg. Do not exceed the maximum load of each programme (refer to the “Programmes” chapter).
- The operating water pressure at the water entry point from the outlet connection must be between 0.5 bar (0.05 MPa) and 10 bar (1.0 MPa).

- The ventilation opening in the base must not be covered by a carpet, mat, or any floor covering.
- The appliance must be connected to the water mains using the new supplied hose sets, or other new hose sets supplied by the Authorised Service Centre.
- Old hose sets must not be reused.
- If the mains power supply cable is damaged, it must be replaced by the manufacturer, its Authorised Service Centre or similarly qualified persons to avoid an electrical hazard.
- Before any maintenance operation, deactivate the appliance and disconnect the mains plug from the socket.
- Do not use high pressure water sprays and/or steam to clean the appliance.
- Clean the appliance with a moist cloth. Use only neutral detergents. Do not use abrasive products, abrasive cleaning pads, solvents or metal objects.

2. SAFETY INSTRUCTIONS

2.1 Installation

ⓘ
The installation must comply with relevant national regulations.

- Remove all the packaging and the transit bolts including rubber bush with plastic spacer.
- Keep the transit bolts in a safe place. If the appliance is to be moved in the future they must be reattached to lock the drum to prevent an internal damage.
- Always take care when moving the appliance as it is heavy. Always use safety gloves and enclosed footwear.
- Follow the installation instructions supplied with the appliance.
- Do not install or use a damaged appliance.
- Do not install or use the appliance where the temperature can be less than 0°C or where it is exposed to the weather.
- The floor area on which the appliance is to be installed must be flat, stable, heat resistant and clean.
- Make sure that there is air circulation between the appliance and the floor.
- When the appliance is in its permanent position, check if it is levelled correctly with the aid of a spirit level. If it is not, adjust the feet accordingly.
- Do not install the appliance directly above a floor drain.
- Do not spray water on the appliance and do not expose it to excessive humidity.
- Do not install the appliance where the appliance door cannot be fully opened.
- Do not put a closed container to collect possible water leakage under the appliance. Contact the Authorised Service Centre to ensure which accessories can be used.

2.2 Electrical connection

⚠ **WARNING!**
Risk of fire and electric shock.

- WARNING: This appliance is designed to be installed / connected to a grounding connection in the building.
- Always use a correctly installed shockproof socket.
- Make sure that the parameters on the rating plate are compatible with the electrical ratings of the mains power supply.
- Do not use multi-plug adapters and extension cables.
- Make sure not to cause damage to the mains plug and to the mains cable. Should the mains cable need to be replaced, this must be carried out by our Authorised Service Centre.
- Connect the mains plug to the mains socket only at the end of the installation. Make sure that there is access to the mains plug after the installation.
- Do not touch the mains cable or the mains plug with wet hands.
- Do not pull the mains cable to disconnect the appliance. Always pull the mains plug.
- This appliance is fitted with a 13 A mains plug. If it is necessary to change the mains plug fuse, use only a 13 A ASTA (BS 1362) fuse (UK and Ireland only).

2.3 Water connection

- The inlet water shall not exceed 25 °C.
- Do not cause damage to the water hoses.
- Before connection to new pipes, pipes not used for a long time, where repair work has been carried out or new devices fitted (water meters, etc.), let the water flow until it is clean and clear.
- Ensure that there are no visible water leaks during and after the first use of the appliance.
- Do not use an extension hose if the inlet hose is too short. Contact the Authorised Service Centre for the replacement of the inlet hose.
- When unpacking the appliance, It is possible to see water flowing from the drain hose. This is due to the testing of the appliance with the use of water in the factory.
- You can extend the drain hose to maximum 400 cm. Contact the Authorised Service Centre for the other drain hose and the extension.
- Make sure that there is access to the tap after the installation.

2.4 Use

⚠ WARNING!

Risk of injury, electric shock, fire, burns or damage to the appliance.

- Follow the safety instructions on the detergent packaging.
- Do not put flammable products or items that are wet with flammable products in, near or on the appliance.
- Do not wash fabrics which are heavily soiled with oil, grease or other greasy substances. It can damage rubber parts of the appliance. Prewash such fabrics by hand before loading them into the appliance.
- Do not use laundry fragrances to avoid the risk of damaging plastic and rubber parts of the appliance.
- Do not touch the glass door while a programme operates. The glass can get hot.
- Make sure that all metal objects are removed from the laundry.

2.5 Service

- To repair the appliance contact the Authorised Service Centre. Use original spare parts only.
- Please note that self-repair or non-professional repair can have safety consequences and might void the guarantee.
- The following spare parts are available for at least 10 years after the model has been discontinued: motor and motor brushes, transmission between motor and drum, pumps, shock absorbers and springs, washing drum, drum spider and related ball bearings, heaters and heating elements, including heat pumps, piping and related equipment including hoses, valves, filters and aquastops, printed circuit boards, electronic displays, pressure switches, thermostats and sensors, software and firmware including reset software, door, door hinge and seals, other seals, door locking assembly, plastic peripherals such as detergent

dispensers. The duration may be longer in your country. For further information, please visit our website.
- Please note that some of these spare parts are only available to professional repairers, and that not all spare parts are relevant for all models.
- Concerning the lamp(s) inside this product and spare part lamps sold separately: These lamps are intended to withstand extreme physical conditions in household appliances, such as temperature, vibration, humidity, or are intended to signal information about the operational status of the appliance. They are not intended to be used in other applications and are not suitable for household room illumination.

2.6 Disposal

⚠ WARNING!

Risk of injury or suffocation.

- Disconnect the appliance from the mains electrical and water supplies.
- Cut off the mains electrical cable close to the appliance and dispose of it.
- Remove the door catch to prevent children or pets from becoming trapped in the drum.
- Dispose of the appliance in accordance with local requirements for the disposal of Waste Electrical and Electronic Equipment (WEEE).

3. PRODUCT DESCRIPTION

3.1 Appliance overview

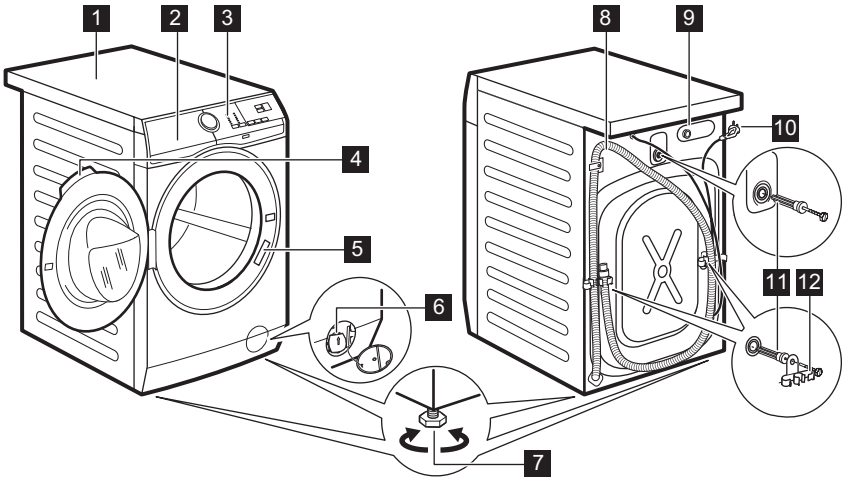

1 Worktop
2 Detergent dispenser
3 Control panel
4 Door handle
5 Rating plate
6 Drain pump filter
7 Feet for levelling the appliance
8 Drain hose
9 Inlet hose connection
10 Mains cable
11 Transit bolts
12 Hose support

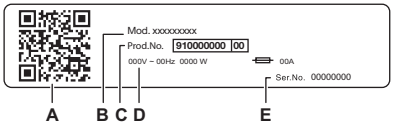

The rating plate reports:

A. QR code
B. Model name
C. Product number
D. Electrical ratings
E. Serial number

Scan the **QR code** on the appliance to register your product and get the most out of it.

- Access your appliance details, documentation and articles on how to use the best features (User Manual also available at **aeg.com/manuals**)
- Get usage advice, troubleshooting, service and repair information (also available at **aeg.com/support**)
- Buy accessories, Consumable and Original Spare parts for you appliance (also available at **aeg.com/shop**)

4. TECHNICAL INFORMATION

Dimension	Width/ Height/ Total depth	59,7 cm /84,7 cm /65,8 cm
Electrical connection	Voltage Overall power Fuse Frequency	230-240 V 2100 W 13 A 50 Hz
Level of protection against ingress of solid particles and moisture ensured by the protective cover, except where the low voltage equipment has no protection against moisture		IPX4
Water supply pressure **1)**	Minimum Maximum	0.5 bar (0.05 MPa) 10 bar (1.0 MPa)
Water supply **2)**		Cold water
Maximum Load	Cotton	10 kg

1) The appliance works correctly if the water pressure is not lower than 0.05 MPa (0.5 bar). If you cannot connect the water inlet hose to the cold water tap of the primary hydraulic system, connect it to your domestic cold water storage system. Make sure not to exceed a distance of 5.02 m (16.5 ft) between the appliance inlet hose and the bottom of the water storage tank.

2) Connect the water inlet hose to a water tap with a 3/4" thread.

5. INSTALLATION

WARNING!

Refer to Safety chapters.

5.1 Unpacking

1. Open the door. Remove all the items from the drum.

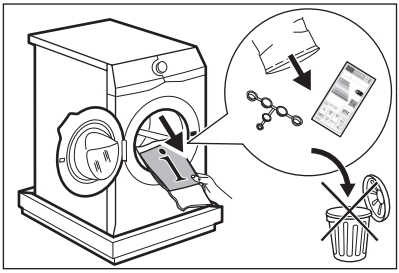

Accessories delivered with the appliance may vary depending on the model.

2. Put the packaging element on the floor behind the appliance and carefully put it down onto its rear side. Remove the protection from the bottom.

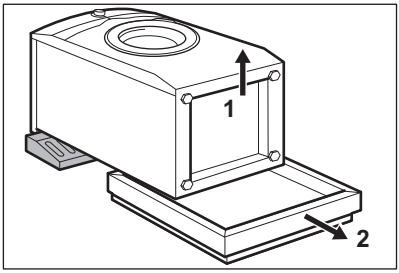

⚠ CAUTION!

Do not lay washing machine on its front.

3. Put the appliance back into an upright position. Remove the power supply cable and the drain hose from the hose holders.

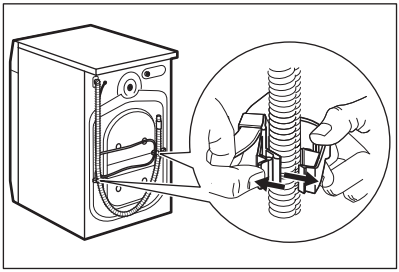

⚠ WARNING!

It is possible to see water flowing from the drain hose. This is because the washing machine has been tested at the factory.

4. Remove the three transit bolts and pull out the plastic spacers.

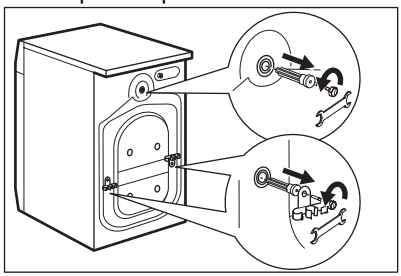

We recommend that you keep the packaging and the transit bolts for any transport of the appliance.

5. Put the plastic caps, that you find in the user manual bag, in the holes.

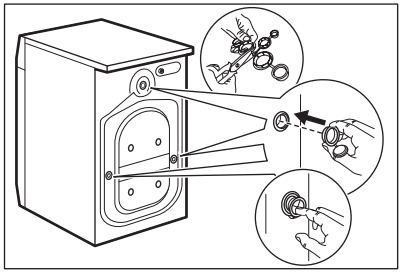

5.2 Information for installation

Positioning and levelling

Adjust the appliance correctly to prevent vibration, noise and movement of the appliance when it operates.

1. Install the appliance on a flat hard floor. The appliance must be levelled and stable. Make sure that the appliance does not touch the wall or other units and there is air circulation below the appliance.

2. Loosen or tighten the feet to adjust the level. All feet must rest firmly on the floor.

⚠ WARNING!

Do not put cardboard, wood or equivalent materials below the appliance feet to adjust the level.

The inlet hose

⚠ CAUTION!

Make sure there is no damage to hoses and there are no leaks from the couplings. Do not use an extension hose if the inlet hose is too short. Contact the service centre for information on inlet hose replacement.

1. Connect the water inlet hose to the back of the appliance if needs. Usually, it is already installed at the factory.

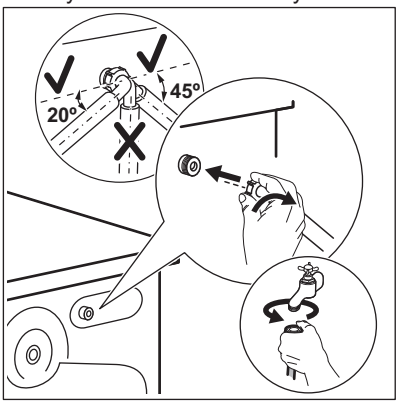

2. Position it toward left or right depending on the positon of the water tap. Make sure that the inlet hose is not in vertical position.
3. If necessary, loosen the ring nut to set it in the correct position.
4. Some model can contain inlet hose with water stop device. It prevents any leaks in the hose because of its natural ageing. The sector in the window shows this fault A. If this occurs, close the water tap and contact the authorized service center for information to replace the hose.

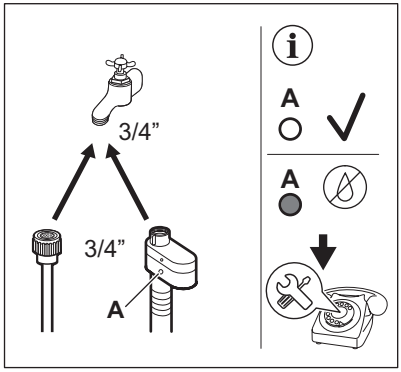

5. Connect the other end of the COLD water inlet hose to the cold water tap with 3/4" thread.

⚠ WARNING!

The inlet water shall not exceed 25 °C.

Water drainage

The drain hose should stay at a height of no less than 60 cm and not more than 100 cm.

ⓘ

You can extend the drain hose to maximum 400 cm. Contact the authorised service centre to buy the other drain hose and the extension.

It is possible to connect the drain hose in different ways:

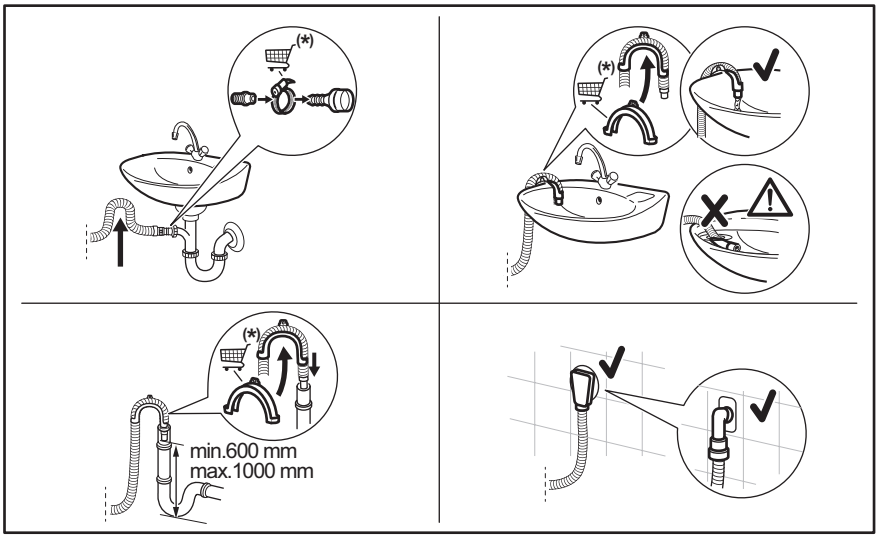

* Subject to change spare parts without notice.

Make sure that the drain hose makes a loop to prevent particles going into the appliance from the sink.

Connect the drain hose to the spigot and tighten it with a clamp. Make sure that the drain hose makes a loop to prevent particles going into the appliance from the sink.

Position the hose directly to a built-in drain pipe in the room wall and tighten it with a clamp.

Without the plastic hose guide, to a sink spigot- Put the drain hose in the spigot and tighten it with a clamp.

The drain hose can be bent into U shape and put around the plastic guide. On the edge of a sink - Fasten the guide to the water tap or to the wall.

ⓘ

Make sure that the plastic guide cannot move when the appliance drains and the drain hose end is not immersed in the water. There may be a return of dirty water into the appliance. Buy accessories from authorised supplier.

To a stand pipe with vent hole - Insert the drain hose directly into a drain pipe or stand pipe

ⓘ

The end of the drain hose must always be ventilated , i.e. the inner diameter of the drain pipe (min. 38 mm - min. 1.5") must be larger than the external diameter of the drain hose.

5.3 Installation on suspended flooring

Suspended wooden floors are particularly susceptible to vibration.

To limit vibration we recommend placing a waterproof wooden panel, at least 15 mm thick, under the appliance. It should be screwed to at least 2 floor beams and should extend beyond the front feet.

If possible, install the appliance where the floor is more stable.

5.4 Electrical connection

At the end of installation you can connect the mains plug to the mains socket.

The rating plate and the 'Technical Data' chapter indicate the necessary electrical ratings. Make sure that they are compatible with the mains power supply.

Check that your domestic electrical installation can take the maximum load required, also taking into account any other appliances may also be in use.

Connect the appliance to an earthed socket.

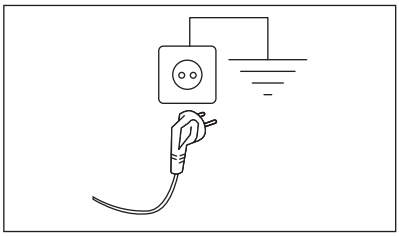

The power supply cable must be easily accessible after installing the appliance.

For any electrical work required to install this appliance, contact our Authorised Service Centre.

The manufacturer does not accept any responsibility for damage or injury through failure to comply with the above safety precaution.

6. CONTROL PANEL

6.1 Control panel description

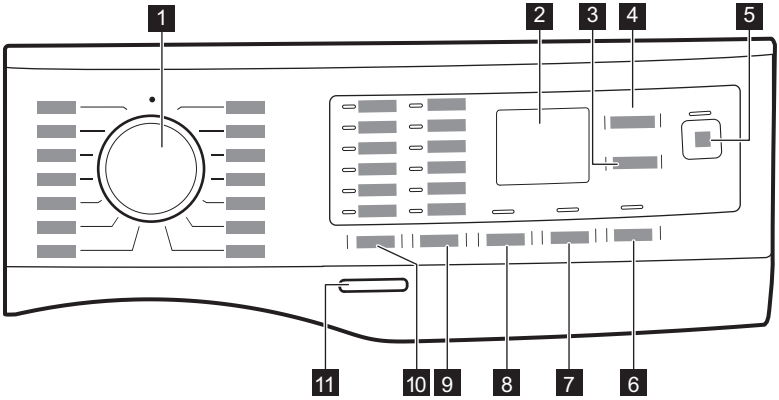

1. Programme dial
2. Display
3. Delay Start touch button
4. Time Save touch button
5. Start/Pause touch button
6. Easy Iron touch button
7. Extra Rinse touch button
8. Prewash touch button
9. Spin reduction options touch button
   - No Spin option
   - Rinse Hold option
   - Night option
10. Temp. touch button
11. On/Off push button

6.2 Display

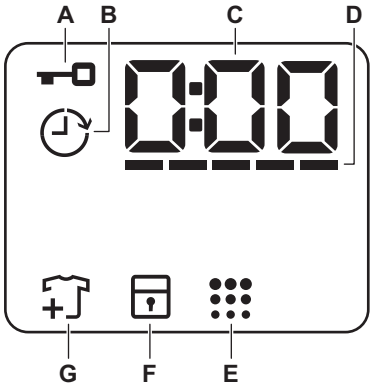

A. Door locked indicator.
B. Delay start indicator.
C. The digital indicator can show:
- Programme duration (e. g. 2:40).
- Delay time (e. g. 2h).
- Cycle end (0:00).
- Warning code (e.g. E20).
- Indication of total operating hours of the appliance. Refer to the "Operating hours counter" section in the "Settings" paragraph for more details.

D. Time Save bars level indicator.
E. Drum clean indicator.
F. Child safety lock indicator.
G. Add garments indicator. Illuminates at the beginning of the Wash phase, while the user can still pause the appliance and add more laundry.

7. DIAL AND BUTTONS

7.1 Introduction

ⓘ

The options/functions are not available with all washing programmes. Check the compatibility between options/functions and washing programmes in the "Programme Chart". An option/function can exclude another one, in this case the appliance doesn't allow you to set incompatible options/functions.

7.2 On/Off

Press this button for a few seconds to activate or deactivate the appliance. Two different tunes sound while switching the appliance on or off.

As the Stand-by function automatically deactivates the appliance after several minutes to reduce the energy consumption, you may need to activate the appliance again.

For more details, refer to Stand-by paragraph in Daily Use chapter.

7.3 Temp.

When you select a washing programme, the appliance automatically proposes a default temperature.

The indicator Cold ✳ = cold water.

The indicator of the set temperature comes on.

7.4 Spin

When you set a programme, the appliance automatically sets the default spin speed allowed.

Additional spin options:

- **No Spin** . The related indicator comes on.
  Set this option to deactivate all spin phases. The appliance performs only the draining phase of the selected washing programme. Set this option for very delicate fabrics. The rinse phase uses more water for some washing programmes
- **Rinse Hold** . The related indicator comes on.
  The final spin is not performed. The water of the last rinse is not drained out to prevent the fabrics from creasing. The washing programme ends with water in the drum.
  The door stays locked and the drum turns regularly to reduce creasing. You must drain the water to unlock the door.
  If you touch the Start/Pause button, the appliance performs the spinning phase and drains the water.
- **Night** . The related indicator comes on.
  The intermediate and the final spinning phases are suppressed and the programme ends with water in the drum. This helps to reduce creasing. The door stays locked. The drum turns regularly to reduce creasing. You must drain the water to unlock the door.
  As the programme is very quiet, it is suitable for use at night time when cheaper electricity tariffs are available. In some programmes the rinses are performed with more water.
  If you touch the Start/Pause button, the appliance performs only the draining phase.

The appliance empties the water out automatically after approximately 18 hours.

7.5 Prewash

With this option you can add a prewash phase to a washing programme.

The relevant indicator illuminates.

- Use this option to add a pre-wash phase at 30 °C before the washing phase. This option is recommended for heavily soiled laundry, especially if containing sand, dust, mud and other solid particles.

These options can increase the programme duration.

7.6 Permanent Extra Rinse

With this option you can add a few rinses according to the selected washing programme.

Use this option for people with allergies to detergent residues and with sensitive skin.

This option increases the programme duration.

The corresponding indicator above the touch button illuminates and also stays permanently on during next cycles until this option is deactivated.

7.7 Easy Iron

The appliance carefully washes and spins the laundry to prevent the creases.

The appliance decreases the spin speed, uses more water and adapts the programme duration to the type of laundry.

The related indicator comes on.

7.8 Delay Start

With this option you can delay the start of a programme to a more convenient time.

Touch the button repeatedly to set the required delay. The time increases in steps of 1 hour up to 20 hours.

The display shows the indicator and the selected delay time. After touching the Start/

Pause ▷‖ button, the appliance begins the countdown and the door is locked.

7.9 Time Save

With this option you can reduce the programme duration depending on the load size and the degree of soiling. This adjustment should be made after the setting of Temp. and Spin .

When you set a washing programme, the display shows the default duration and ––––– dashes.

Touch Time Save button to reduce the programme duration according to your needs. The display shows the new programme duration and a number of dashes will decrease accordingly:

––––– suitable for a full load of normally soiled garments.

––– a quick cycle for a smaller lightly soiled garments (max. half load recommended).

– the shortest cycle to freshen up a small amount of laundry.

The Time Save is available only with the programmes in the table.

indicator	Cottons	Synthetics	Dark Clothes
––––– 1)	■	■	■
–––	■	■	■
–	■	■	■

1) Defaullt duration for all programmes.

7.10 Start/Pause ▷‖

Touch the Start/Pause ▷‖ button to start, pause the appliance or interrupt a running programme.

8. PROGRAMMES

8.1 Programme Chart

Programme Default temperature Temperature range	Reference spin speed Spin speed range	Maximum load	Programme description (Type of load and level of soiling)
Eco 40-60 40 °C 1)	1400 rpm (1400- 800 rpm)	10 kg	**White cotton and fast-coloured cotton**. Normally soiled items. The energy consumption decreases and the time of the washing programme is extended, ensuring good washing results.
Cottons 40°C 90°C - Cold	1400 rpm (1400- 800 rpm)	10 kg	**White cotton and coloured cotton**. Normally, heavily and lightly soiled items.
Synthetics 30°C 60°C - Cold	1200 rpm (1200- 800 rpm)	4 kg	**Synthetic items or mixed fabric items**. Normally soiled items.

Programme Default temperature Temperature range	Reference spin speed Spin speed range	Maximum load	Programme description (Type of load and level of soiling)
Delicates 30°C 40°C - Cold	1200 rpm (1200- 800 rpm)	2 kg	**Delicate fabrics such as acrylics, viscose and mixed fabrics requiring gentler washing**. Normally and lightly soiled items.
Wool 40 °C 40°C - Cold	1200 rpm (1200- 800 rpm)	1,5 kg	**Machine washable wool, hand washable wool and other fabrics** with «hand washing» care symbol **2)**.
Denim 30 °C 40 °C - Cold	800 rpm (1200 - 800 rpm)	3 kg	**Special programme for Denim clothing with delicate washing phase to minimize colour fading and marks**. For better care a reduced load size is recommended.
Sportswear 30 °C 40°C - Cold	1200 rpm (1200- 800 rpm)	4 kg	**Synthetic and delicate items**. Lightly soiled items or items to refresh.
Spin/Drain **3)**	1400 rpm (1400 -800 rpm)	10 kg	**All fabrics, except woollens and delicate fabrics**. To spin the laundry and to drain the water in the drum.
Rinse	1400 rpm (1400- 800 rpm)	10 kg	To rinse and spin the laundry. **All fabrics**, except woollens and very delicate fabrics. Reduce the spin speed accordingly to the type of laundry.
Dark Clothes 40°C 60°C - Cold	1200 rpm (1200- 800 rpm)	10 kg	**Cotton items or mixed fabric items in dark colours.** Normally soiled items.
Anti-Allergy 60 °C	1400 rpm (1400- 800 rpm)	10 kg	**White cotton items**. This programme removes micro-organisms thanks to a washing phase with the temperature maintained above 60°C for several minutes. This helps remove germs, bacteria, micro-organism and particles. An additional rinsing phase ensures a proper removal of detergent residues and pollens/allergenic items. In this way the wash is more effective.
14min Refresh 30 °C	800 rpm (800- 800 rpm)	1,5 kg	**Synthetic and mixed fabric items.** Very light soiling and items to freshen up.
30min Wash 40°C 40°C - 30°C	1200 rpm (1200- 800 rpm)	3 kg	**Synthetic and mixed fabric items.** Lightly soiled items.

Programme Default temperature Temperature range	Reference spin speed Spin speed range	Maximum load	Programme description (Type of load and level of soiling)
60min Wash 30°C 60°C - 30°C	1400 rpm (1400- 800 rpm)	5 kg	Cotton and fast-coloured synthetic items. Complete washing programme that, in only 60 minutes, washes the daily soiled laundry intensively and ensures a good washing performance in a short time.

1) According to UK Ecodesign for Energy-Related Products and Energy Information Regulations, this programme at 40 °C is able to clean normally soiled cotton laundry declared to be washable at 40 °C or 60 °C, together in the same cycle.

For the reached temperature in the laundry, the programme duration and other data, please refer to 'Consumption Values' chapter.
The most efficient programmes in terms of energy consumption are generally those that perform at lower temperatures and longer duration.

2) During this cycle the drum rotates slowly to ensure a gentle wash. It can seem that the drum doesn't rotate or doesn't rotate properly, but this is normal for this programme.

3) Set the spin speed. Make sure it is suitable for the type of fabric being washed. If you set the No Spin option then only the drain phase is available.

Programme options compatibility

Programme	OPTIONS Spin				Prewash	Extra Rinse	Easy Iron	Time Save	Delay Start
Eco 40-60	■		■						■
Cottons	■	■	■	■	■	■	■	■	■
Synthetics	■	■	■	■	■	■	■	■	■
Delicates	■	■	■	■		■			■
Wool	■	■	■						■
Denim	■	■	■	■		■	■		■
Sportswear	■	■	■		■	■	■		■
Spin/Drain	■	■							■
Rinse	■	■	■			■			■
Dark Clothes	■	■	■		■	■		■	■
Anti-Allergy	■	■	■		■	■			■

Programme	OPTIONS	Spin				Prewash	Extra Rinse	Easy Iron	Time Save	Delay Start
14min Refresh			■	■						■
30min Wash		■	■							■
60min Wash		■	■	■			■			■

Suitable detergents for washing programmes

Programme	Universal powder[1)]	Liquid Universal	Liquid for coloureds	Delicates woollens	Special
Eco 40-60	▲	▲	▲	--	--
Cottons	▲	▲	▲	--	--
Synthetics	▲	▲	▲	--	--
Delicates	--	--	--	▲	▲
Wool	--	--	--	▲	▲
Denim	--	--	▲	▲	▲
Sportswear	--	▲	▲	--	▲
Dark Clothes	--	--	▲	▲	▲
Anti-Allergy	▲	▲	▲	--	--
14min Refresh	--	▲	▲	--	--
30min Wash	--	▲	▲	--	--
60min Wash	▲	▲	▲	--	--

1) At temperature higher than 60 °C the use of powder detergent is recommended.

▲ = Recommended

-- = Not recommended

9. SETTINGS

9.1 Acoustic signals

This appliance has different acoustic signals, that operate when:

- You activate the appliance (special short tune).
- You deactivate the appliance (special short tune).
- You touch the buttons (click sound).
- You make an invalid selection (3 short sounds).

- The programme is completed (sequence of sounds for about 1 minute).
- The appliance has a malfunction (sequence of short sounds for about 5 minutes).

To **deactivate/activate** the acoustic signals set a one of the programme, touch the Temp. and the Spin buttons simultaneously for about 2 seconds. The display shows On/Off

ⓘ

If you deactivate the acoustic signals, they continue to operate when the appliance has a malfunction.

9.2 Child Lock

With this option you can prevent children from playing with the control panel.

To **activate/deactivate** this option, hold down the Easy Iron button until **comes on/goes off** on the display.

The appliance will default to this option after you switch it off.

The Child Lock function may not be available for a few seconds after switching the appliance on.

9.3 Operating Hours Counter

It is possible to visualise the total operating time of the appliance in hours, starting from the first switching on. This value will count operating time of the cycles (does not include pauses, delayed start time). To visualise this value, proceed as follows:

1. Switch the appliance on by pressing On/Off button.
2. Turn the programme knob to the Eco 40-60 programme (1st position clockwise).
3. Press and hold the Spin and Temp. buttons for some seconds (within 10 seconds after the switching on. After these 10 seconds, the key combination activates and deactivates the acoustic signals).
4. After 3 seconds the total hours operated by the appliance are shown in the display: e.g. 1276 hours, the display shows the text Hr for 2 seconds, 12 (thousands and hundreds) for 2 seconds and 76 (tens and units).

ⓘ

If the procedure does not work (due to timeout, wrong programme dial position or wrong keys combination), switch the appliance off and repeat sequence from the beginning.

9.4 Factory Reset

This function allows to restore the factory default options. To **activate** this option follow steps below:

1. Switch the appliance on by pressing On/Off button.
2. Turn the programme knob to the Synthetics programme (3rd position clockwise).
3. Press and hold the Spin and Temp. buttons for some seconds (within 10 seconds after the switching on. After these 10 seconds, the key combination activates and deactivates the acoustic signals).
4. The display will show **– – –** for about 5 seconds.

ⓘ

If the procedure does not work (due to timeout, wrong programme dial position or wrong keys combination), switch the appliance off and repeat sequence from the beginning.

10. DAILY USE

⚠ **WARNING!**

Refer to Safety chapters.

10.1 Activating the appliance

1. Connect the mains plug to the mains socket.
2. Open the water tap.

3. Press the On/Off button for a few seconds to activate the appliance.

A short tune sounds.

10.2 Loading the laundry

1. Open the appliance door.
2. Empty the pockets and unfold the items before you put them in the appliance.
3. Put the laundry in the drum, one item at a time.

Do not put too much laundry in the drum.

4. Close the door firmly.

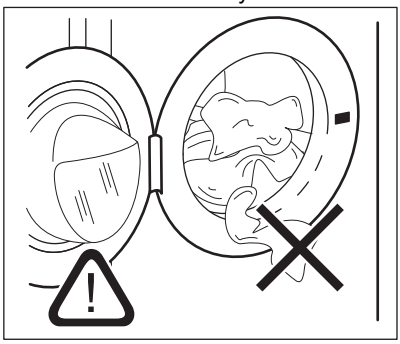

⚠ CAUTION!

-Make sure that no laundry gets caught between the seal and the door to avoid risk of water leakage and damage to the laundry.

-Washing heavily oiled, greasy stains or using fragrances perfume could cause damage to rubber parts of the washing machine.

10.3 Detergent compartments. Using and additives

1. Measure out specified detergents and the fabric conditioner.

2. Put the detergent and the fabric conditioner into the proper compartments.

3. Carefully close the detergent drawer.

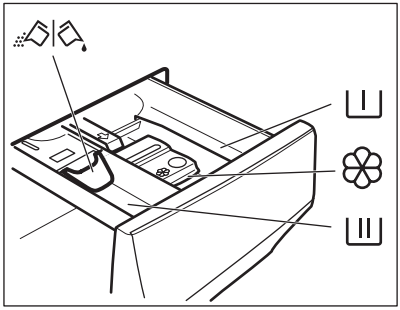

I	Compartment for prewash phase, soak programme or stain remover.
II	Compartment for washing phase.
❀	Compartment for liquid additives (fabric conditioner, starch).
MAX	Maximum level for quantity of liquid additives.

	Flap for powder or liquid detergent.

Always follow the instructions that you find on the packaging of the detergent products, but we recommend that you do not exceed the maximum indicated level. This quantity will however guarantee the best washing results.

After a washing cycle, if necessary, remove any detergent residue from the detergent dispenser.

10.4 Position of the detergent flap

1. Pull out the detergent dispenser until it stops.

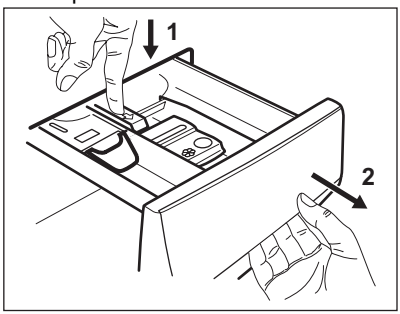

2. Remove the drawer. Press the place with the (PUSH) to remove the drawer easily.

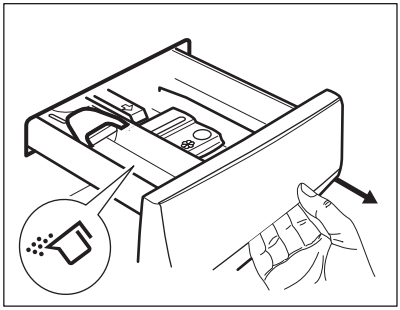

3. To use liquid detergent, adjust the flap in right position, turn the flap down.

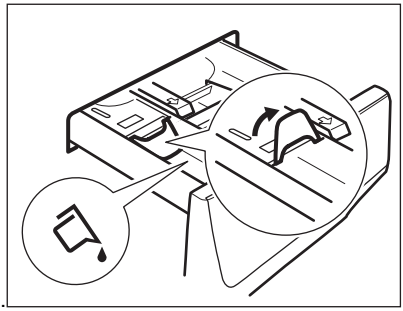

With the flap in the position **DOWN**:

- Do not use gelatinous or thick liquid detergents.
- Do not exceed to liquid detergent dose indicated on the flap.
- Do not set the prewash phase.
- Do not set the delay start function.

4. Measure out the detergent and the fabric conditioner.
5. Put back the drawer in the recess.
6. To use powder detergent again turn flap in the position **UP**

Make sure that the flap does not cause a blockage when you close the drawer.

10.5 Setting a programme

1. Turn the programme dial to select the desired washing programme.

The indicator of the Start/Pause ▷‖ button flashes.
The display shows an indicative programme duration.

2. To change the temperature and/or the spin speed, touch the related buttons.
3. If desired, set one or more options by touching the related buttons. The related indicators illuminate on the display and the given information changes accordingly.

If a selection is **not possible** an acoustic signal sounds.

10.6 Additional information about daily use

The AutoSense System load detection
The AutoSense starts estimating the weight of the load to calculate the real programme duration. The appliance automatically adjusts the programme duration to the load to achieve perfect washing results in the minimum possible time. The AutoSense is not available in programmes with short cycles.

Starting a programme

Touch the Start/Pause button to start the programme. The related indicator stops flashing and stays on. The programme starts, the door is locked. The display shows the indicator The programme starts, the door is locked. The display shows the indicator.

Starting a programme with delay start

1.Touch the Delay Start button repeatedly until the display shows the desired delay time.

2. Touch the Start/Pause button. The appliance door locks and starts the countdown of the delay start. When the countdown is completed, the programme starts automatically.

Interrupting a programme and changing the options.
1.When the programme is running, you can change only some options. Touch the Start/Pause button.

2. Change the options. The given information in the display changes accordingly

3. Touch the Start/Pause again. The washing programme continues.

Cancelling a running programme

- Press the button On/Off button to cancel the programme and to deactivate the appliance. Press again to activate the appliance.
- Rotate the selection knob to the "reset" position activate the appliance . Wait 2 second. Now you can set a new washing programme.

Opening the door- adding garments

- Touch the Start/Pause button. The indicator starts flashing.
- Wait until the door lock indicator stops flashing and goes off..Now you can open the door, add or remove the items.
- Close the door and touch Start/Pause washing programme will be continues.

Draining water out after end of cycle
If you have chosen a programme or an option that does not empty out the water of the last rinse you must remember to drain the water:

- Touch button Spin to decrease the spin speed proposed by the appliance
- Press the Start/Pause
- When the programme is completed and the door locked indicator goes off, you can open the door.
- On/Off to deactivate the appliance.

Stand-by function
The Stand-by function automatically deactivates the appliance to reduce the energy consumption.

11. CARE AND CLEANING

> ⚠ **WARNING!**
> Refer to Safety chapters.

11.1 Periodic cleaning schedule

Periodic cleaning helps to extend the life of your appliance.

After each cycle, keep the door and the detergent dispenser slightly open to get air circulation and dry the humidity inside the appliance.

If the appliance is not used for a long time: close the water tap and unplug the appliance.

Indicative periodic cleaning schedule:

Descaling	Twice a year
Maintenance wash	Once a month
Clean door seal	Every two months
Clean drum	Every two months
Clean detergent dispenser	Every two months
Clean drain pump filter	Twice a year
Clean the inlet hose and the valve filter	Twice a year

11.2 Removing foreign objects

ⓘ

Make sure that pockets are empty and all loose elements are tied up before running your cycle.

Remove any foreign objects (such as metal clip, buttons, coins, etc) that you may find in the door seal, the filters and the drum. Refer to "Door seal with double lip trap", "Cleaning the drum", "Cleaning the drain pump" and "Cleaning the inlet hose and the valve filter" paragraphs. Be careful with curtains. Remove the hooks and put the curtains in a washing bag or pillowcase. If necessary, please contact the Authorised Service Centre.

11.3 External cleaning

Clean the appliance with mild soap and warm water only. Fully dry all the surfaces. Do not use a scouring pads or any scratching material.

⚠ **CAUTION!**

Do not use alcohol, solvents or chemical products.

⚠ **CAUTION!**

Do not clean the metal surfaces with chlorine-based detergent.

11.4 Descaling

ⓘ

If the water hardness in your area is high or moderate, we recommend that you use a water descaling product for washing machines.

Regularly examine the drum to check for limescale.

Regular detergents already contain water softening agents, but we recommend to run a cycle with an empty drum and a descaling product occasionally.

ⓘ

Always follow the instructions that you find on the packaging of the product.

11.5 Maintenance wash

The repeated and prolonged use of low temperature programmes can cause detergent deposits, fluff residues, bacterial growth inside the drum and the tub. This could generate bad odours and mildew. To eliminate these deposits and clean the inner part of the appliance, run a maintenance wash regularly (at least once a month).

ⓘ

Refer to "Cleaning the drum" paragraph.

11.6 Cleaning the drum

Regularly examine the drum to prevent unwanted deposits.

Rust deposits in the drum may occur due to rusting foreign body in the washing or tap water containing iron

Clean the drum with special products for stainless steel.

ⓘ

Always follow the instructions that you find on the packaging of the product.
Do not clean the drum with acidic descaling products, scouring products containing chlorine or iron or steel wool.

For a thorough clean:

1. Remove all laundry from the drum.
2. Run a Cottons programme with the highest temperature.
3. Add a small quantity of powder detergent into the empty drum, in order to rinse out any left residues.

Door seal with double lip trap

This appliance is designed with a **self cleaning draining system**, allowing light fluff fibers that fall off the clothes to be drained out with the water. Regularly examine the seal and if necessary clean as described in the following diagram. Coins, buttons, other small items can be recovered at the end of the cycle.

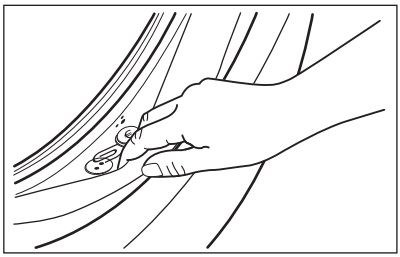

Clean it when needed, using ammonia cream cleanser agent without scratching the seal surface.

ⓘ

Always obey the instructions that you find on the packaging of the product.

Check and remove objects (if there are any) that could be trapped in the fold.

Make sure that no laundry remains between the seal and the door.

Use a moist cloth to wipe off any dirt or water residue left behind in the door seal after completion of program cycle.

11.7 Cleaning the detergent dispenser

To prevent possible deposits of dried detergent or clotted fabric softener and/or formation of mould in the detergent dispenser drawer, every two months carry out the following cleaning procedure how explained in the following diagrams.

1.
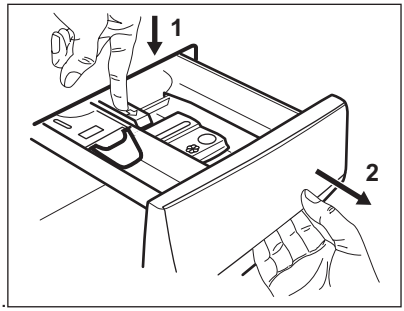

2.
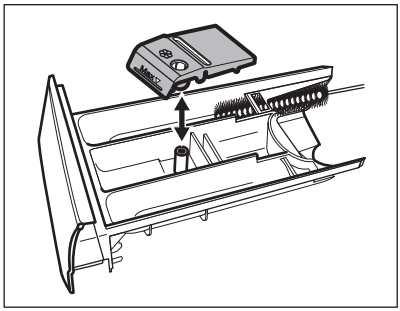

3.
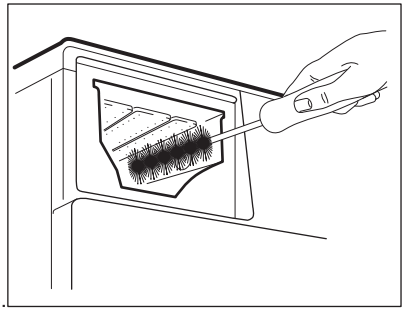

4.
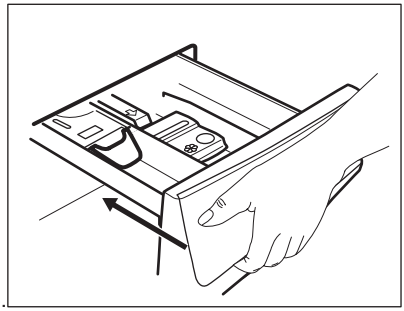

11.8 Cleaning the drain pump filter

Regularly check the drain pump filter and make sure that it is clean.

Clean the drain pump filter if:

- The appliance does not drain the water.
- The drum does not turn.
- The appliance makes an unusual noise because of the blockage of the drain pump.
- The display shows the alarm code E20.

⚠ WARNING!

- Disconnect the mains plug from the mains socket.
- Do not remove the filter while the appliance operates.
- Do not clean the pump if the water in the appliance is hot. Wait until the water cools down .
- Repeat Step 3 several times by closing and opening the valve until the water stops flowing out.

Always keep a rag nearby to dry up any water spillages when removing the filter.

Proceed as described in following diagrams to clean the pump filter:

1.

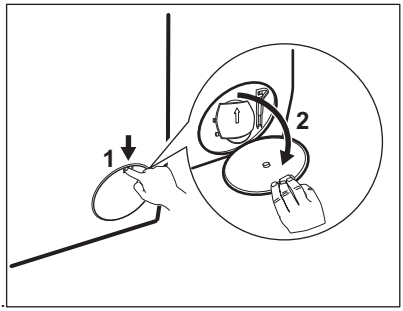

2.

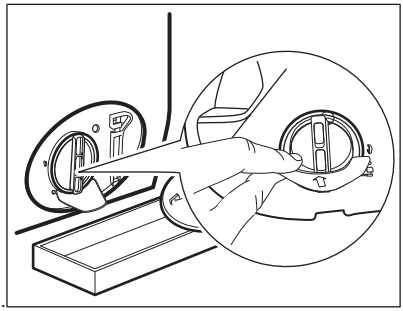

3.

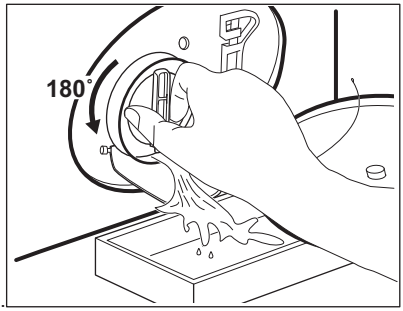

4.

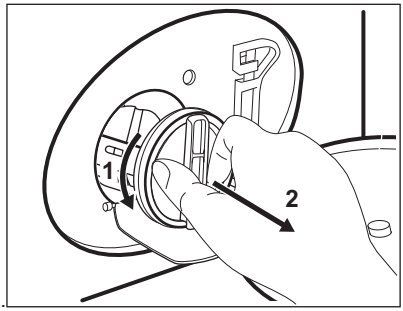

5.

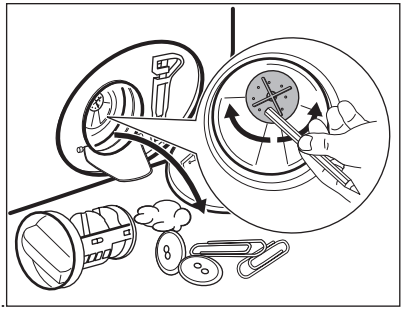

6.

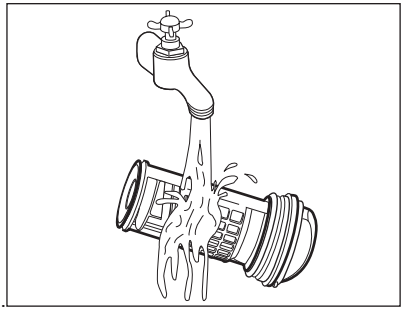

7.

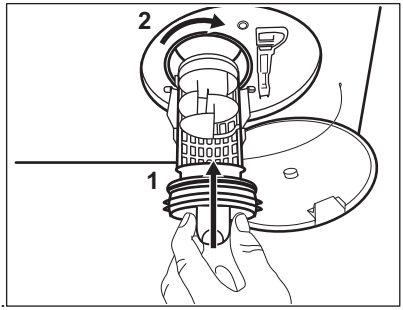

8.

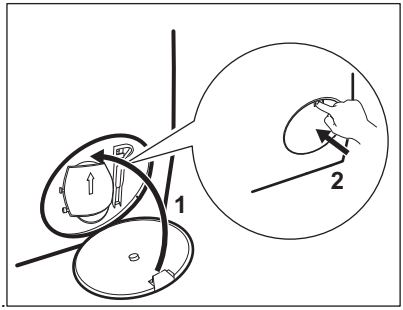

⚠ WARNING!

Make sure that the impeller of the pump can rotate. If it does not rotate, contact the Authorised Service Centre. Make sure also that you tighten the filter correctly to prevent leakages.

11.9 Cleaning the inlet hose and the valve filter

It is recommended to clean both the filters of the inlet hose and valve twice a year to remove any deposit, collected over the time. Proceed as described in following diagrams to clean filters:

1. Remove the inlet hose from the tap and clean the filter.

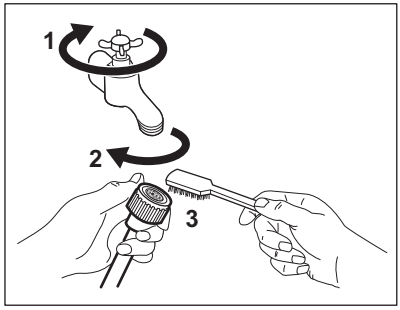

2. Remove the inlet hose from the appliance by loosening the ring nut.

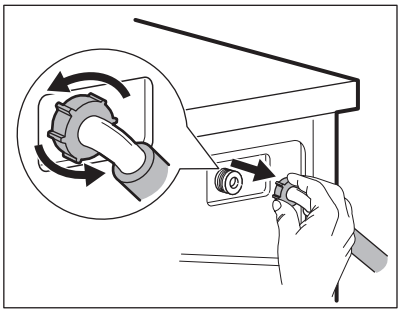

3. Clean the valve filter on the back of the appliance with a toothbrush.

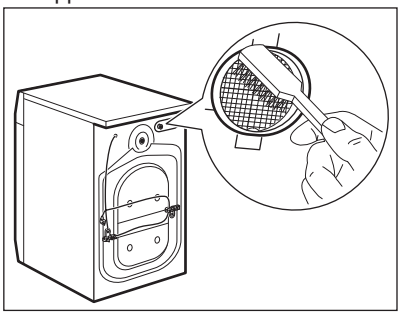

4. When you reconnect the hose to the back of the appliance, turn it left or right (not in vertical position) depending on the position of your water tap.

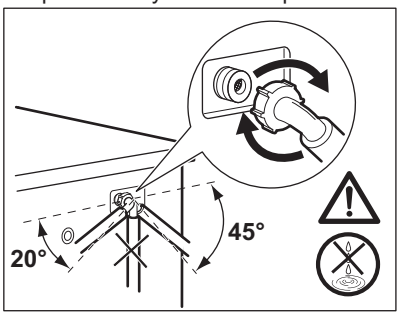

11.10 Emergency drain

If the appliance cannot drain the water, carry out the same procedure, described in 'Cleaning the drain pump' paragraph. If necessary, clean the pump.

11.11 Frost precautions

If the appliance is installed in an area where the temperature can reach values around 0° C or drop below, remove the remaining water from the inlet hose and the drain pump.

1. Disconnect the mains plug from the mains socket.
2. Close the water tap.
3. Put the two ends of the inlet hose in a container and let the water flow out of the hose.
4. Empty the drain pump. Refer to the emergency drain procedure.
5. When the drain pump is empty, install the inlet hose again.

⚠ WARNING!

Make sure that the temperature is higher than 0 °C before you use the appliance again.
The manufacturer is not responsible for damages caused by low temperatures.

12. CONSUMPTION VALUES

12.1 Introduction

The QR code on the energy label supplied with the appliance provides a web link to the product information sheet. Keep the energy label for reference together with the user manual and all other documents provided with this appliance.

12.2 According to UK Ecodesign for Energy-Related Products and Energy Information Regulations

Eco 40-60 programme	kg	kWh	Litres	hh:mm	% 1)	°C	rpm 2)
Full load	10	0.860	69.0	3:50	53.00	34	1351
Half load	5	0.465	55.0	2:55	53.00	27	1351
Quarter load	2,5	0.305	40.0	2:35	54.00	25	1351

1) Remaining moisture at the end of the spinning phase. The higher is the spin speed, the higher is the noise and the lower is the remaining moisture.

2) Maximum spin speed.

Power consumption in different modes

Off (W)	Stand-by (W)	Delay start (W)
0.50	0.50	4.00

Time to Off/Standby mode is 15 minutes maximum.

12.3 Common programmes

ⓘ

These values are indicative only.

Programme	kg	kWh	Litres	hh:mm	%	°C	rpm 1)
Cottons 2) 90°C	10	2.90	85.0	4:05	52.00	85	1400
Cottons 60°C	10	1.80	80.0	3:40	52.00	55	1400
Cottons 3) 20°C	10	0.40	80.0	3:15	52.00	20	1400
Synthetics 40°C	4	0.85	75.0	2:30	35.00	40	1200
Delicates 4) 30°C	2	0.35	60.0	1:25	35.00	30	1200
Wool 30°C	1,5	0.30	70.0	1:05	30.00	30	1200

1) Reference indicator of the spin speed.

2) Suitable for washing heavily soiled textiles.

3) Suitable for washing lightly soiled cottons, synthetic and mixed fabrics.

4) It also performs as quick washing cycle for lightly soiled laundry.

13. QUICK GUIDE

13.1 Daily use

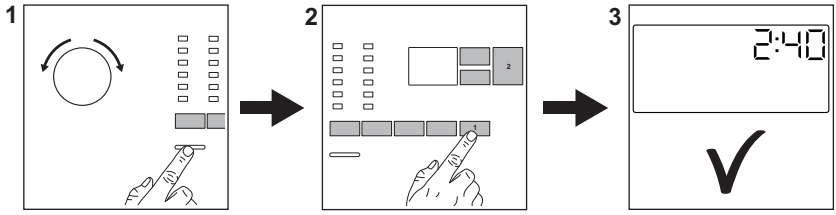

Connect the mains plug to the mains socket.

Open the water tap.

Load the laundry.

Pour the detergent and other treatment in the proper compartment of the detergent dispenser.

1. Push the **On/Off** button to turn the appliance on. Turn the programme dial to set the desired programme.
2. Set the desired options (1) by means of the corresponding touch buttons. To start the programme, touch the **Start/Pause** ▷‖ (2) button.
3. The appliance starts.

At the end of the programme, remove the laundry.

Push the **On/Off** button to turn the appliance off.

13.2 Care and cleaning

Periodic cleaning schedule will helps to extend the life of your appliance.

After each cycle, keep the door and the detergent dispenser slightly ajar to get air circulation and dry the humidity inside the appliance: this will prevent mildew and odours.

If the appliance is not used for a long time: close the water tap and unplug the appliance.

Descaling	Twice a year
Maintenance wash	Once a month
Clean door seal	Every two months
Clean drum	Every two months
Clean detergent dispenser	Every two months
Clean drain pump filter	Twice a year
Clean the inlet hose and the valve filter	Twice a year

The following paragraphs explain how you should clean some part.

Door seal with double lip trap
This appliance is designed with a **self cleaning draining system**, allowing light fluff fibers that fall off the clothes to be drained out with the water. Regularly examine the seal and if necessary clean as described in the following diagram. Coins, buttons, other small items can be recovered at the end of the cycle.

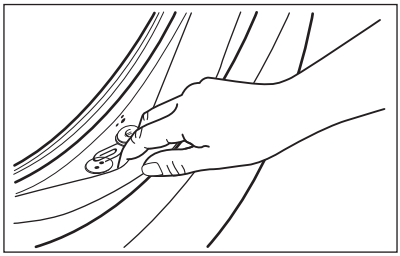

Clean it when needed, using ammonia cream cleanser agent without scratching the seal surface.

Always obey the instructions that you find on the packaging of the product.
Check and remove objects (if there are any) that could be trapped in the fold.
Make sure that no laundry remains between the seal and the door.
Use a moist cloth to wipe off any dirt or water residue left behind in the door seal after completion of program cycle.

Removing foreign objects

Make sure that pockets are empty and all loose elements are tied up before running your cycle.

Remove any foreign objects (such as metal clip, buttons, coins, etc) that you may find in the door seal, the filters and the drum. If necessary, please contact the Authorised Service Centre.

Cleaning the drain pump filter

Clean the filter regularly and, especially, if the alarm code E20 appears on the display.

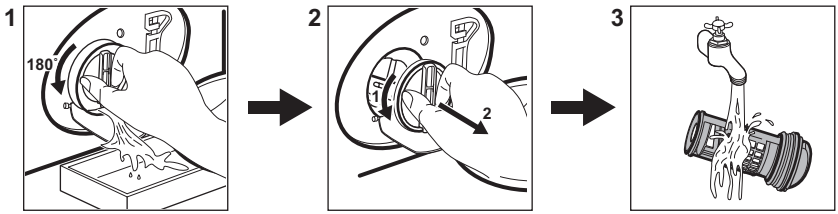

13.3 Programmes

Programmes	Load	Product description
Eco 40-60 1)	10 kg	White and coloured cottons. Normally soiled garments.
Cottons	10 kg	White cotton and coloured cotton.
Synthetics	4 kg	Synthetic items or mixed fabric items.
Delicates	2 kg	Delicate fabrics such as acrylics, viscose, polyester items.
Wool	1,5 kg	Machine washable wool, hand washable wool and delicates.
Denim	3 kg	Denim clothing.
Sportswear	4 kg	Sportswear.
Spin/Drain	10 kg	All fabrics, except woollens and very delicate fabrics. Programme for spinning and draining the water.

Programmes	Load	Product description
Rinse	10 kg	All fabrics, except woollens and very delicate fabrics. Programme for rinsing and spinning.
Dark Clothes	10 kg	Cotton items or mixed fabric items in dark colours.
Anti-Allergy	10 kg	White cotton items. This programme helps to remove germs and bacteria.
14min Refresh	1,5 kg	Cotton and synthetic lightly soiled items or once worn items.
30min Wash	3 kg	Synthetic and mixed fabric items. Lightly soiled items.
60min Wash	5 kg	Cotton and synthetic items. This programme ensures a good washing performance in a short time.

1) According to Commission Regulation EU 2019/2023, this programme at 40 °C is able to clean normally soiled cotton laundry declared to be washable at 40 °C or 60 °C, together in the same cycle.

For the reached temperature in the laundry, the programme duration and other data, please refer to 'Consumption Values' chapter.
The most efficient programmes in terms of energy consumption are generally those that perform at lower temperatures and longer duration.

Loading the appliance to the **maximum capacity indicated for each programmes** **helps to reduce energy and water consumption**.

Suitable detergents for washing programmes

Programme	Universal powder[1)]	Liquid Universal	Liquid for coloureds	Delicates woollens	Special
Eco 40-60	▲	▲	▲	--	--
Cottons	▲	▲	▲	--	--
Synthetics	▲	▲	▲	--	--
Delicates	--	--	--	▲	▲
Wool	--	--	--	▲	▲
Denim	--	--	▲	▲	▲
Sportswear	--	▲	▲	--	▲
Dark Clothes	--	--	▲	▲	▲
Anti-Allergy	▲	▲	▲	--	--
14min Refresh	--	▲	▲	--	--

Programme	Universal powder[1)]	Liquid Universal	Liquid for coloureds	Delicates woollens	Special
30min Wash	--	▲	▲	--	--
60min Wash	▲	▲	▲	--	--

1) At temperature higher than 60 °C the use of powder detergent is recommended.

-- = Not recommended ▲ = Recommended

13.4 Detergent type and quantity.

- Use only detergents and other treatments specially made for washing machines. First, follow these generic rules:
  - powder detergents (also tablets and single-dose detergents) for all types of fabric, excluding delicate. Prefer powder detergents containing bleach for whites and laundry sanitization,
  - liquid detergents (also single-dose detergents), preferably for low temperature wash programmes (60 °C max) for all types of fabric, or special ones for woollens only.
- Do not mix different types of detergents.
- Use less detergent if:
  - you are washing a small load,
  - the laundry is lightly soiled,
  - there is large amounts of foam during washing.
- When using detergent tabs or pods, always put them inside the drum, not in the detergent dispenser and follow the manufacturer's recommendations.

Insufficient detergent may cause:
- unsatisfactory washing results,
- the wash load to turn grey,
- greasy clothes,
- mould in the appliance.

Excessive detergent may cause:
- sudsing,
- reduced washing effect,
- inadequate rinsing,
- a greater impact for the environment.

14. ALARM CODES AND POSSIBLE FAILURES

The appliance does not start or it stops during operation. First try to find a solution to the problem (refer to the tables).

⚠ WARNING!

Deactivate the appliance before carrying out any check.

Problem	Possible solution
E 10 The appliance does not fill with water properly.	• Make sure that the water tap is open. • Make sure that the pressure of the water supply is not too low. For this information, contact your local water authority. • Make sure that the water tap is not clogged. • Make sure that the inlet hose has no kinks, damages or bends. • Make sure that the connection of the water inlet hose is correct. • Make sure that the filter of the inlet hose and the filter of the valve are not clogged.

E20 The appliance does not drain the water.	• Make sure that the sink spigot is not clogged. • Make sure that the drain hose has no kinks or bends. • Make sure that the drain filter is not clogged. Clean the filter, if necessary. • Make sure that the connection of the drain hose is correct. • Set the drain programme if you set a programme without drain phase. • Set the drain programme if you set an option which ends with water in the tub.
E40 The appliance door is open or not closed correctly.	• Make sure that the door is properly closed.
E91 Internal fail. No communication between electronic elements of the appliance.	• The programme was not finished properly or the appliance stopped too early. Switch the appliance off and on again. • If the alarm code appears again, contact the Authorised Service Centre.
EH0 The mains supply is unstable.	• Wait until mains supply is stable.
EF0 The anti-flood device is on.	• Disconnect the appliance and close the water tap. Contact the Authorised Service Centre.
If the problem persists, contact the Authorised Service Centre. The necessary data for the service centre are on the rating plate	
*Some alarm codes may not occur. Subject to change without notice.	

15. ENVIRONMENTAL CONCERNS

Recycle materials with the symbol ♺. Put the packaging in relevant containers to recycle it. Help protect the environment and human health by recycling waste of electrical and electronic appliances. Do not dispose of appliances marked with the symbol with the household waste. Return the product to your local recycling facility or contact your municipal office.

aeg.com

135944530-A-202025



UK
CA