User Manual

GETTING STARTED? EASY.



ZWF143A2DG

EN User Manual
Washing Machine

ZANUSSI

VISIT OUR WEBSITE TO:

Get usage advice, brochures, trouble shooter, service and repair information:
www.zanussi.com/support

⚠ SAFETY INFORMATION

Before the installation and use of the appliance, carefully read the supplied instructions. The manufacturer is not responsible for any injuries or damage that are the result of incorrect installation or usage. Always keep the instructions in a safe and accessible location for future reference.

CHILDREN AND VULNERABLE PEOPLE SAFETY

- This appliance can be used by children aged from 8 years and above and persons with reduced physical, sensory or mental capabilities or lack of experience and knowledge if they have been given supervision or instruction concerning the use of the appliance in a safe way and understand the hazards involved.
- Children between 3 and 8 years of age and persons with very extensive and complex disabilities shall be kept away from the appliance unless continuously supervised.
- Children of less than 3 years of age should be kept away from the appliance unless continuously supervised.
- Do not let children play with the appliance.
- Keep all packaging away from children and dispose of it appropriately.
- Keep detergents away from children.
- Keep children and pets away from the appliance when the door is open.
- If the appliance has a child safety device, it should be activated.
- Children shall not carry out cleaning and user maintenance of the appliance without supervision.

GENERAL SAFETY

- Do not change the specification of this appliance.
- This appliance is intended to be used in household and similar applications such as:

  - staff kitchen areas in shops, offices and other working environments;
  - by clients in hotels, motels, bed & breakfast and other residential type environments;
  - areas for communal use in blocks of flats or in launderettes.
- Do not exceed the maximum load of 10 kg (refer to the "Programme chart" chapter).
- The operating water pressure at the water entry point from the outlet connection must be between 0.5 bar (0.05 MPa) and 8 bar (0.8 MPa).
- The ventilation opening in the base must not be covered by a carpet, mat, or any floor covering.
- The appliance must be connected to the water mains using the new supplied hose sets, or other new hose sets supplied by the Authorised Service Centre.
- Old hose sets must not be reused.
- If the mains power supply cable is damaged, it must be replaced by the manufacturer, its Authorised Service Centre or similarly qualified persons to avoid an electrical hazard.
- Before any maintenance operation, deactivate the appliance and disconnect the mains plug from the socket.
- Do not use high pressure water sprays and/or steam to clean the appliance.
- Clean the appliance with a moist cloth. Use only neutral detergents. Do not use abrasive products, abrasive cleaning pads, solvents or metal objects.

SAFETY INSTRUCTIONS

INSTALLATION

The installation must comply with relevant national regulations.

- Remove all the packaging and the transit bolts including rubber bush with plastic spacer.
- Keep the transit bolts in a safe place. If the appliance is to be moved in the future they must be reattached to lock the drum to prevent an internal damage.
- Always take care when moving the appliance as it is heavy. Always use safety gloves and enclosed footwear.
- Follow the installation instructions supplied with the appliance.
- Do not install or use a damaged appliance.
- Do not install or use the appliance where the temperature can be less than 0°C or where it is exposed to the weather.
- The floor area on which the appliance is to be installed must be flat, stable, heat resistant and clean.

- Make sure that there is air circulation between the appliance and the floor.
- When the appliance is in its permanent position, check if it is levelled correctly with the aid of a spirit level. If it is not, adjust the feet accordingly.
- Do not install the appliance directly above a floor drain.
- Do not spray water on the appliance and do not expose it to excessive humidity.
- Do not install the appliance where the appliance door cannot be fully opened.
- Do not put a closed container to collect possible water leakage under the appliance. Contact the Authorised Service Centre to ensure which accessories can be used.

ELECTRICAL CONNECTION



WARNING! Risk of fire and electric shock.

- The appliance must be earthed.
- Always use a correctly installed shockproof socket.
- Make sure that the parameters on the rating plate are compatible with the electrical ratings of the mains power supply.
- Do not use multi-plug adapters and extension cables.
- Make sure not to cause damage to the mains plug and to the mains cable. Should the mains cable need to be replaced, this must be carried out by our Authorised Service Centre.
- Connect the mains plug to the mains socket only at the end of the installation. Make sure that there is access to the mains plug after the installation.
- Do not touch the mains cable or the mains plug with wet hands.
- Do not pull the mains cable to disconnect the appliance. Always pull the mains plug.
- This appliance is fitted with a 13 A mains plug. If it is necessary to change the mains plug fuse, use only a 13 A ASTA (BS 1362) fuse (UK and Ireland only).

WATER CONNECTION

- Do not cause damage to the water hoses.
- Before connection to new pipes, pipes not used for a long time, where repair work has been carried out or new devices fitted (water meters, etc.), let the water flow until it is clean and clear.
- Ensure that there are no visible water leaks during and after the first use of the appliance.
- Do not use an extension hose if the inlet hose is too short. Contact the Authorised Service Centre for the replacement of the inlet hose.
- When unpacking the appliance, It is possible to see water flowing from the drain hose. This is due to the testing of the appliance with the use of water in the factory.
- You can extend the drain hose to maximum 400 cm. Contact the Authorised Service Centre for the other drain hose and the extension.
- Make sure that there is access to the tap after the installation.

USE



WARNING! Risk of injury, electric shock, fire, burns or damage to the appliance.

- Follow the safety instructions on the detergent packaging.
- Do not put flammable products or items that are wet with flammable products in, near or on the appliance.
- Do not wash fabrics which are heavily soiled with oil, grease or other greasy substances. It can damage rubber parts of the washing machine. Prewash such fabrics by hand before loading them into the washing machine.
- Do not touch the glass door while a programme operates. The glass can get hot.
- Make sure that all metal objects are removed from the laundry.

INTERNAL LIGHTING



WARNING! Risk of injury.

- Concerning the lamp(s) inside this product and spare part lamps sold separately: These lamps are intended to withstand extreme physical conditions in household appliances, such as temperature, vibration, humidity, or are intended to signal information about the operational status of the appliance. They are not intended to be used in other applications and are not suitable for household room illumination.
- To replace the internal lighting, contact the Authorised Service Centre.

SERVICE

- To repair the appliance contact the Authorised Service Centre. Use original spare parts only.
- Please note that self-repair or non-professional repair can have safety consequences and might void the guarantee.
- The following spare parts will be available for 10 years after the model has been discontinued: motor and motor brushes, transmission between motor and drum, pumps, shock absorbers and

springs, washing drum, drum spider and related ball bearings, heaters and heating elements, including heat pumps, piping and related equipment including hoses, valves, filters and aquastops, printed circuit boards, electronic displays, pressure switches, thermostats and sensors, software and firmware including reset software, door, door hinge and seals, other seals, door locking assembly, plastic peripherals such as detergent dispensers. Please note that some of these spare parts are only available to professional repairers, and that not all spare parts are relevant for all models.

DISPOSAL

WARNING! Risk of injury or suffocation.

- Disconnect the appliance from the mains electrical and water supplies.
- Cut off the mains electrical cable close to the appliance and dispose of it.
- Remove the door catch to prevent children or pets from becoming trapped in the drum.
- Dispose of the appliance in accordance with local requirements for the disposal of Waste Electrical and Electronic Equipment (WEEE).

PRODUCT DESCRIPTION

APPLIANCE OVERVIEW

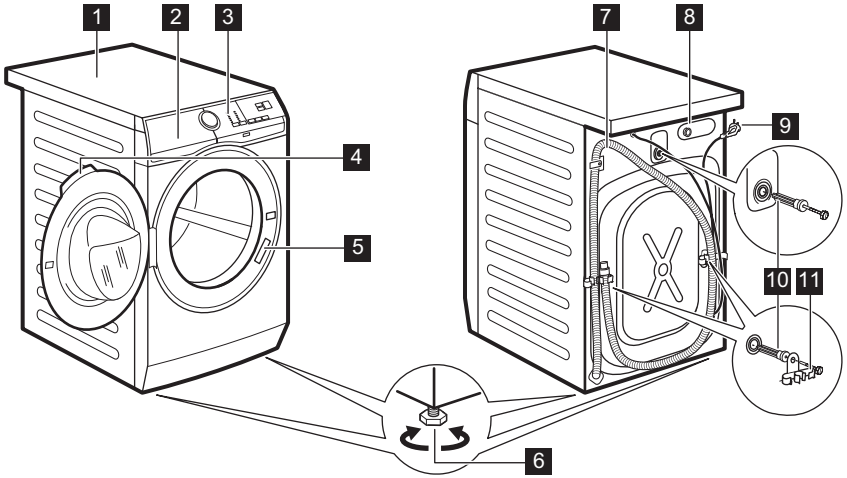

1 Worktop
2 Detergent dispenser
3 Control panel
4 Door handle
5 Rating plate
6 Feet for levelling the appliance
7 Drain hose
8 Inlet hose connection
9 Mains cable
10 Transit bolts
11 Hose support

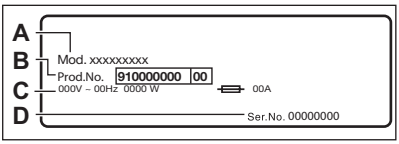

The rating plate reports the model name (**A**) , product number (**B**), electrical ratings (**C**) and serial number (**D**).

TECHNICAL DATA

Dimension	Width/ Height/ Total depth	59,7 cm /84,7 cm /65,8 cm
Electrical connection	Voltage Overall power Fuse Frequency	230-240 V 2200 W 13 A 50 Hz
Level of protection against ingress of solid particles and moisture ensured by the protective cover, except where the low voltage equipment has no protection against moisture		IPX4
Water supply pressure **1)**	Minimum Maximum	0.5 bar (0.05 MPa) 8 bar (0.8 MPa)
Water supply **2)**		Cold water
Maximum Load	Cotton	10 kg
Spin Speed	Maximum spin speed	1351 rpm

1) The appliance works correctly if the water pressure is not lower than 0.05 MPa (0.5 bar). If you cannot connect the water inlet hose to the cold water tap of the primary hydraulic system, connect it to your domestic cold water storage system. Make sure not to exceed a distance of 5.02 m (16.5 ft) between the appliance inlet hose and the bottom of the water storage tank.
2) Connect the water inlet hose to a water tap with a 3/4" thread.

INSTALLATION

WARNING! Refer to Safety chapters.

Accessories delivered with the appliance may vary depending on the model.

UNPACKING

1. Open the door. Remove all the items from the drum.

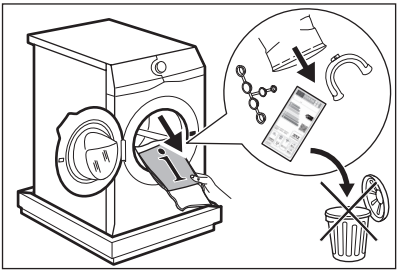

2. Put the packaging element on the floor behind the appliance and carefully put it down onto its rear side. Remove the polystyrene protection from the bottom.

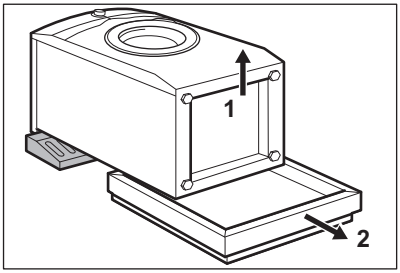

CAUTION! Do not lay washing machine on its front.

3. Put the appliance back into an upright position. Remove the power supply cable and the drain hose from the hose holders.

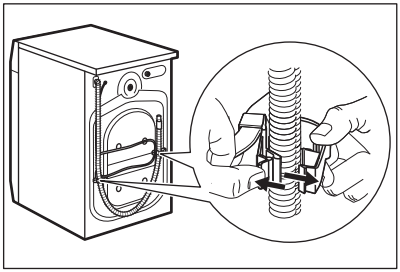

WARNING! It is possible to see water flowing from the drain hose. This is because the washing machine has been tested at the factory.

4. Remove the three transit bolts and pull out the plastic spacers.

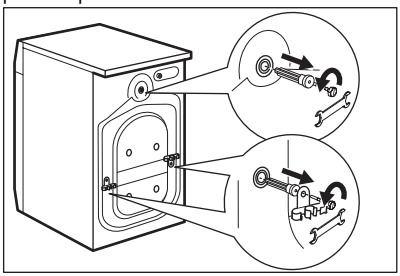

We recommend that you keep the packaging and the transit bolts for any transport of the appliance.

5. Put the plastic caps, that you find in the user manual bag, in the holes.

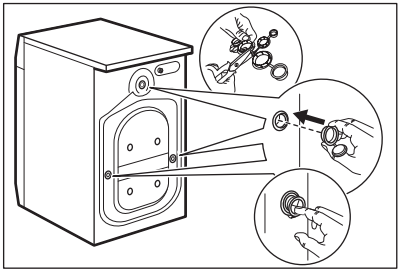

INFORMATION FOR INSTALLATION

Positioning and levelling

Adjust the appliance correctly to prevent vibration, noise and movement of the appliance when it operates.

1. Install the appliance on a flat hard floor. The appliance must be levelled and stable. Make sure that the appliance does not touch the wall or other units and there is air circulation below the appliance.

2. Loosen or tighten the feet to adjust the level. All feet must rest firmly on the floor.

WARNING! Do not put cardboard, wood or equivalent materials below the appliance feet to adjust the level.

The inlet hose

CAUTION! Make sure there is no damage to hoses and there are no leaks from the couplings. Do not use an extension hose if the inlet hose is too short. Contact the service centre for a replacement inlet hose.

1. Connect the water inlet hose to the back of the appliance.

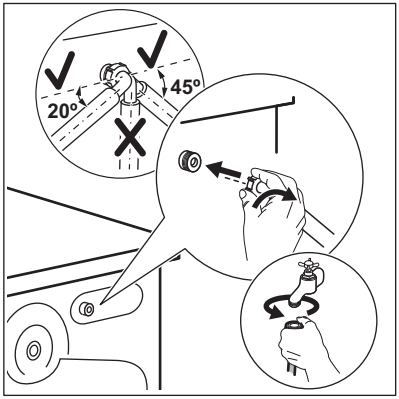

2. Position it toward left or right depending on the positon of the water tap. Make sure that the inlet hose is not in vertical position.

3. If necessary, loosen the ring nut to set it in the correct position.

4. Connect the water inlet hose to the cold water tap with 3/4" thread.

Water drainage

The drain hose should stay at a height of no less than 60 cm and not more than 100 cm.

You can extend the drain hose to maximum 400 cm. Contact the authorised service centre for the other drain hose and the extension.

It is possible to connect the drain hose in different ways:

1. Make a U shape with the drain hose and put it around the plastic hose guide.

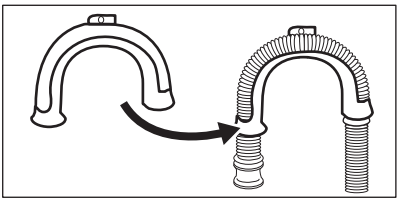

2. On the edge of a sink - Fasten the guide to the water tap or to the wall.

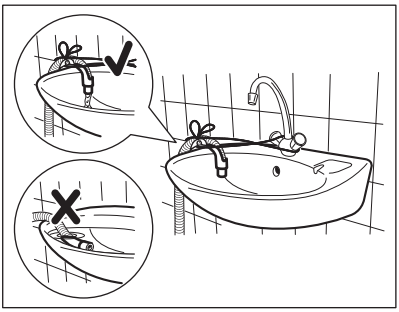

Make sure that the plastic guide cannot move when the appliance drains and the drain hose end is not immersed in the water. There may be a return of dirty water into the appliance.

3. If the end of the drain hose looks like this (see the picture), you can push it directly into the stand pipe.

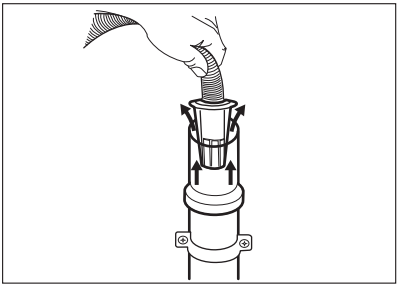

4. To a stand pipe with vent hole - Insert the drain hose directly into a drain pipe. Refer to the illustration.

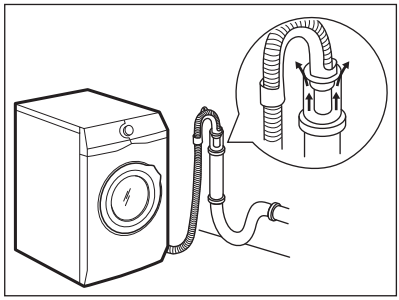

The end of the drain hose must always be ventilated , i.e. the inner diameter of the drain pipe (min. 38 mm - min. 1.5") must be larger than the external diameter of the drain hose.

5. Without the plastic hose guide, to a sink spigot- Put the drain hose in the spigot and tighten it with a clamp. Refer to the illustration.

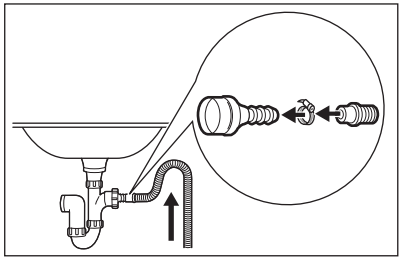

Make sure that the drain hose makes a loop to prevent particles going into the appliance from the sink.

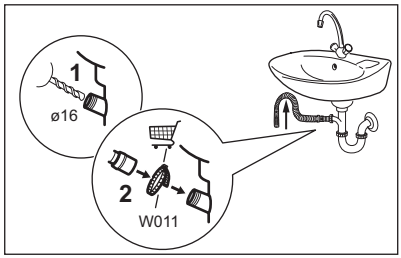

Connect the drain hose to the spigot and tighten it with a clamp. Make sure that the drain hose makes a loop to prevent particles going into the appliance from the sink.

6. Position the hose directly to a built-in drain pipe in the room wall and tighten it with a clamp.

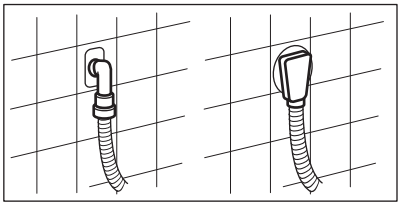

INSTALLATION ON SUSPENDED FLOORING

Suspended wooden floors are particularly susceptible to vibration.

To limit vibration we recommend placing a waterproof wooden panel, at least 15 mm thick, under the appliance. It should be screwed to at least 2 floor beams and should extend beyond the front feet.

If possible, install the appliance where the floor is more stable.

ELECTRICAL CONNECTION

At the end of installation you can connect the mains plug to the mains socket.

The rating plate on the inner edge of the appliance door and the 'Technical Data' chapter indicate the necessary electrical ratings. Make sure that they are compatible with the mains power supply.

Check that your domestic electrical installation can take the maximum load required, also taking into account any other appliances in use.

Connect the appliance to an earthed socket.

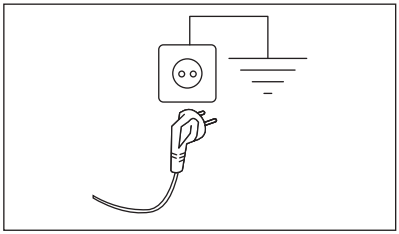

The power supply cable must be easily accessible after installing the appliance.

For any electrical work required to install this appliance, contact our Authorised Service Centre.

The manufacturer does not accept any responsibility for damage or injury through failure to comply with the above safety precaution.

ACCESSORIES

AVAILABLE IN WWW.ZANUSSI.COM/SHOP OR FROM AUTHORISED DEALER

Read carefully the instructions supplied with the accessory.

Only appropriate accessories approved by ZANUSSI ensure the safety standards of the appliance. If unapproved parts are used, any claims will be invalidated.

FIXING PLATE KIT

If you install the appliance on a plinth that is not an accessory supplied by ZANUSSI, secure the appliance in the fixing plates.

Read carefully the instructions supplied with the accessory.

STACKING KIT

The tumble dryer can be stacked on the top of the washing machine **only by using the correct stacking kit**.

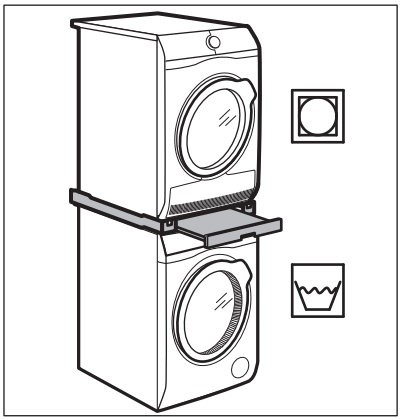

WARNING! Do not put the tumble dryer under the washing machine. Verify the compatible stacking kit by checking the depth of your appliances.

CONTROL PANEL

SPECIAL FEATURES

Your new washing machine meets all modern requirements for an effective treatment of laundry with low water, energy and detergent consumption and will care for fabrics.

- The **AutoAdjust System** detects the laundry load weight defining the programme duration in 30 seconds. The washing programme is tailored to the laundry load and the type of fabric without consuming more time, energy and water than necessary. Read the paragraph "The AutoAdjust load detection " for more details.
- This appliance is designed with a **self cleaning draining system**, allowing light fluff fibers that fall off the clothes to be drained out with the water, in such a way that there is no need by the customer to access this area for regular maintenance and cleaning. Read the chapter "Care and Cleaning" for best maintenance and care.

CONTROL PANEL DESCRIPTION

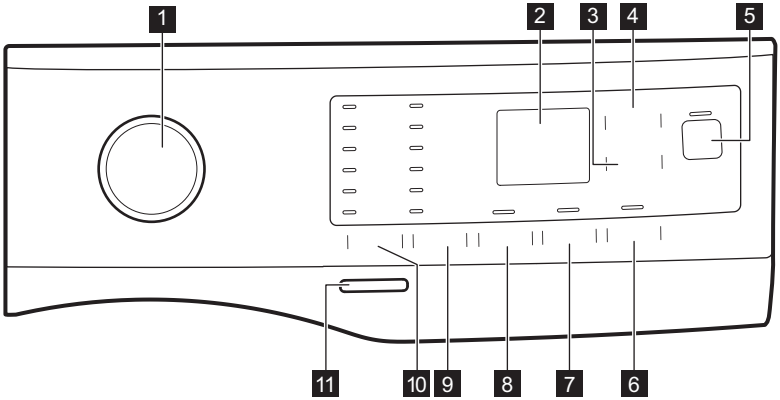

1 Programme dial
2 Display
3 Delay Start touch button
4 FlexiTime touch button
5 Start/Pause touch button
6 Easy Iron touch button
7 Extra Rinse touch button
8 Prewash touch button
9 Spin reduction options touch button
- No Spin option
- Rinse Hold option
- Night option

10 Temp. touch button
11 ON/OFF push button

DISPLAY

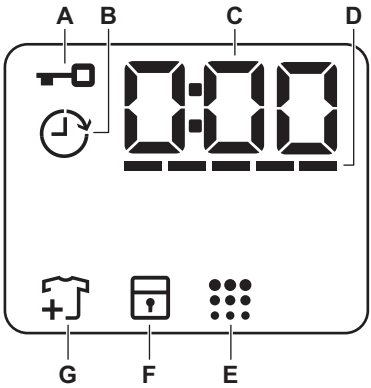

A		Door locked indicator.
B		Delay start indicator.
C	0:00	The digital indicator can show: ▪ Programme duration (e. g. 2:40). ▪ Delay time (e. g. 2h). ▪ Cycle end (0:00). ▪ Warning code (e.g. E20).
D	_____	FlexiTime bars level indicator.
E		Drum clean indicator.
F		Child safety lock indicator.
G		Add garments indicator. Illuminates at the beginning of the Wash phase, while the user can still pause the appliance and add more laundry.

DIAL AND BUTTONS

INTRODUCTION

The options/functions are not available with all washing programmes. Check the compatibility between options/functions and washing programmes in the "Programme Chart". An option/function can exclude another one, in this case the appliance doesn't allow you to set incompatible options/functions.

ON/OFF

Press this button for a few seconds to activate or deactivate the appliance. Two different tunes sound while switching the appliance on or off.

As the Stand-by function automatically deactivates the appliance after several minutes to reduce the energy consumption, you may need to activate the appliance again.

For more details, refer to Stand-by paragraph in Daily Use chapter.

TEMP.

When you select a washing programme, the appliance automatically proposes a default temperature.

The indicator Cold = cold water.

The indicator of the set temperature comes on.

SPIN

When you set a programme, the appliance automatically sets the maximum spin speed allowed except programme Denim.

Additional spin options:

- **No Spin** . The related indicator comes on. Set this option to deactivate all spin phases. The appliance performs only the draining phase of the selected washing programme. Set this option for very delicate fabrics. The rinse phase uses more water for some washing programmes
- **Rinse Hold** . The related indicator comes on.
  The final spin is not performed. The water of the last rinse is not drained out to prevent the fabrics from creasing. The washing programme ends with water in the drum.
  The door stays locked and the drum turns regularly to reduce creasing. You must drain the water to unlock the door.
  If you touch the Start/Pause button, the appliance performs the spinning phase and drains the water.
- **Night** . The related indicator comes on.
  The intermediate and the final spinning phases are suppressed and the programme ends with water in the drum. This helps to reduce creasing. The door stays locked. The drum turns regularly to reduce creasing. You must drain the water to unlock the door.
  As the programme is very quiet, it is suitable for use at night time when cheaper electricity tariffs are available. In some programmes the rinses are performed with more water.
  If you touch the Start/Pause button, the appliance performs only the draining phase.

The appliance empties the water out automatically after approximately 18 hours.

PREWASH

With this option you can add a prewash phase to a washing programme.

The relevant indicator illuminates.

- Use this option to add a pre-wash phase at 30 °C before the washing phase.
  This option is recommended for heavily soiled laundry, especially if containing sand, dust, mud and other solid particles.

These options can increase the programme duration.

PERMANENT EXTRA RINSE

With this option you can add a few rinses according to the selected washing programme.

Use this option for people with allergies to detergent residues and with sensitive skin.

This option increases the programme duration.

The corresponding indicator above the touch button illuminates and also stays permanently on during next cycles until this option is deactivated.

EASY IRON

The appliance carefully washes and spins the laundry to prevent the creases.

The appliance decreases the spin speed, uses more water and adapts the programme duration to the type of laundry.

The related indicator comes on.

DELAY START

With this option you can delay the start of a programme to a more convenient time.

Touch the button repeatedly to set the required delay. The time increases in steps of 1 hour up to 20 hours.

The display shows the indicator and the selected delay time. After touching the Start/Pause button, the appliance begins the countdown and the door is locked.

FLEXITIME

With this option you can reduce the programme duration depending on the load size and the degree of soiling. This adjustment should be made after the setting of Temp. and Spin .

When you set a washing programme, the display shows the default duration and ‾‾‾‾‾ dashes.

Touch FlexiTime button to reduce the programme duration according to your needs. The display shows the new programme duration and a number of dashes will decrease accordingly:

⎓ suitable for a full load of normally soiled garments.

⎓ a quick cycle for a smaller lightly soiled garments (max. half load recommended).

– the shortest cycle to freshen up a small amount of laundry.

The FlexiTime is available only with the programmes in the table.

indicator	Eco 40-60	Cottons	Synthetics	Dark Colours
⎓1)	■	■	■	■
⎓	■	■	■	■
–	■	■	■	■

1) Defaullt duration for all programmes.

START/PAUSE ▷‖

Touch the Start/Pause ▷‖ button to start, pause the appliance or interrupt a running programme.

PROGRAMMES

PROGRAMME CHART

Programme Default temperature Temperature range	Reference spin speed Spin speed range	Maximum load	Programme description (Type of load and level of soiling)
Washing programmes			
Eco 40-60 40 °C 1) 60 °C - 30 °C2)	1400 rpm (1400- 800 rpm)	10 kg	**White cotton and fast-coloured cotton**. Normally soiled items. The energy consumption decreases and the time of the washing programme is extended, ensuring good washing results.
Cottons 40°C 90°C - Cold	1400 rpm (1400- 800 rpm)	10 kg	**White cotton and coloured cotton**. Normally, heavily and lightly soiled items.
Synthetics 40°C 60°C - Cold	1200 rpm (1200- 800 rpm)	4 kg	**Synthetic items or mixed fabric items**. Normally soiled items.
Delicates 30°C 40°C - Cold	1200 rpm (1200- 800 rpm)	2 kg	**Delicate fabrics such as acrylics, viscose and mixed fabrics requiring gentler washing**. Normally and lightly soiled items.
Wool 40 °C 40°C - Cold	1200 rpm (1200- 800 rpm)	1,5 kg	**Machine washable wool, hand washable wool and other fabrics** with «hand washing» care symbol3).

Programme Default temperature Temperature range	Reference spin speed Spin speed range	Maximum load	Programme description (Type of load and level of soiling)
Denim 30 °C 40 °C - Cold	800 rpm (1200 - 800)	3 kg	**Special programme for Denim clothing with delicate washing phase to minimize colour fading and marks**. For better care a reduced load size is recommended.
Sportswear 30 °C 40°C - Cold	1200 rpm (1200- 800 rpm)	4 kg	**Synthetic and delicate items**. Lightly soiled items or items to refresh.
Spin/Drain 4)	1400 rpm (1400 -800)	10 kg	**All fabrics, except woollens and delicate fabrics**. To spin the laundry and to drain the water in the drum.
Rinse	1400 rpm (1400- 800 rpm)	10 kg	To rinse and spin the laundry. **All fabrics**, except woollens and very delicate fabrics. Reduce the spin speed accordingly to the type of laundry.
Dark Colours 40°C 60°C - Cold	1200 rpm (1200- 800 rpm)	10 kg	**Cotton items or mixed fabric items in dark colours.** Normally soiled items.
CleanBoost 60 °C	1400 rpm (1400- 800 rpm)	10 kg	White cotton items. This programme removes micro-organisms thanks to a washing phase with the temperature maintained above 60°C for several minutes. This helps remove germs, bacteria, micro-organism and particles. An additional rinsing phase ensures a proper removal of detergent residues and pollens/allergenic items. In this way the wash is more effective.
14min Refresh 30 °C	800 rpm (800- 800 rpm)	1,5 kg	**Synthetic and mixed fabric items.** Very light soiling and items to freshen up.
30min Rapid 40°C 40°C - 30°C	1200 rpm (1200- 800 rpm)	3 kg	**Synthetic and mixed fabric items.** Lightly soiled items.

Programme Default temperature Temperature range	Reference spin speed Spin speed range	Maximum load	Programme description (Type of load and level of soiling)
60min EasyWash 30°C 60°C - 30°C	1400 rpm (1400- 800 rpm)	5 kg	Cotton and fast-coloured synthetic items. Complete washing programme that, in only 60 minutes, washes the daily soiled laundry intensively and ensures a good washing performance in a short time.

1) According to Commission Regulation EU 2019/2023, this programme at 40 °C is able to clean normally soiled cotton laundry declared to be washable at 40 °C or 60 °C, together in the same cycle.

For the reached temperature in the laundry, the programme duration and other data, please refer to 'Consumption Values' chapter.
The most efficient programmes in terms of energy consumption are generally those that perform at lower temperatures and longer duration.

2) Standard programmes for the Energy Label consumption values. According to EU regulation 1061/2010, this programme at 60 °C is the «Standard 60°C cotton programme» and at 30 °C is the «Standard 40°C cotton programme». They are the most efficient programmes in terms of combined energy and water consumption for washing normally soiled cotton laundry.

The water temperature of the washing phase may differ from the temperature declared for the selected programme.

3) During this cycle the drum rotates slowly to ensure a gentle wash. It can seem that the drum doesn't rotate or doesn't rotate properly, but this is normal for this programme.
4) Set the spin speed. Make sure it is suitable for the type of fabric being washed. If you set the No Spin option then only the drain phase is available.

Programme options compatibility

Programme	Spin				Prewash	Extra Rinse	Easy Iron	FlexiTime	Delay Start
Eco 40-60	■	■	■		■	■		■	■
Cottons	■	■	■	■	■	■	■	■	■
Synthetics	■	■	■	■	■	■	■	■	■
Delicates	■	■	■	■		■			■
Wool	■	■	■						■
Denim	■	■	■	■		■	■		■
Sportswear	■	■	■		■	■	■		■

Programme	Spin				Prewash	Extra Rinse	Easy Iron	FlexiTime	Delay Start
Spin/Drain	■	■							■
Rinse	■	■	■			■			■
Dark Colours	■	■	■		■	■		■	■
CleanBoost	■	■	■		■	■			■
14min Refresh		■	■						■
30min Rapid	■	■							■
60min EasyWash	■	■	■			■			■

Suitable detergents for washing programmes

Programme	Universal powder[1)]	Liquid Universal	Liquid for coloureds	Delicates woollens	Special
Eco 40-60	▲	▲	▲	--	--
Cottons	▲	▲	▲	--	--
Synthetics	▲	▲	▲	--	--
Delicates	--	--	--	▲	▲
Wool	--	--	--	▲	▲
Denim	--	--	▲	▲	▲
Sportswear	--	▲	▲	--	▲
Dark Colours	--	--	▲	▲	▲
CleanBoost	▲	▲	▲	--	--
14min Refresh	--	▲	▲	--	--
30min Rapid	--	▲	▲	--	--
60min Easy-Wash	▲	▲	▲	--	--

1) At temperature higher than 60 °C the use of powder detergent is recommended.

▲ = Recommended -- = Not recommended

SETTINGS

ACOUSTIC SIGNALS

This appliance has different acoustic signals, that operate when:

- You activate the appliance (special short tune).
- You deactivate the appliance (special short tune).
- You touch the buttons (click sound).
- You make an invalid selection (3 short sounds).
- The programme is completed (sequence of sounds for about 2 minutes).
- The appliance has a malfunction (sequence of short sounds for about 5 minutes).

To **deactivate/activate** the acoustic signals when the programme is completed, touch the Temp. and the Spin buttons simultaneously for about 2 seconds. The display shows On/Off

If you deactivate the acoustic signals, they continue to operate when the appliance has a malfunction.

CHILD LOCK

With this option you can prevent children from playing with the control panel.

To **activate/deactivate** this option, hold down the Easy Iron button until **comes on/goes off** on the display.

The appliance will default to this option after you switch it off.

The Child Lock function may not be available for a few seconds after switching the appliance on.

BEFORE FIRST USE

1. Make sure that the electrical power is available and the water tap is open.
2. Pour a small quantity of detergent into the compartment marked by .
3. Set and start a programme for cotton at the highest temperature without any laundry in the drum.

This removes all possible dirt from the drum and the tub.

DAILY USE

WARNING! Refer to Safety chapters.

ACTIVATING THE APPLIANCE

1. Connect the mains plug to the mains socket.
2. Open the water tap.
3. Press the ON/OFF button for a few seconds to activate the appliance.

A short tune sounds.

LOADING THE LAUNDRY

1. Open the appliance door.
2. Empty the pockets and unfold the items before you put them in the appliance.
3. Put the laundry in the drum, one item at a time.

Do not put too much laundry in the drum.

4. Close the door firmly.

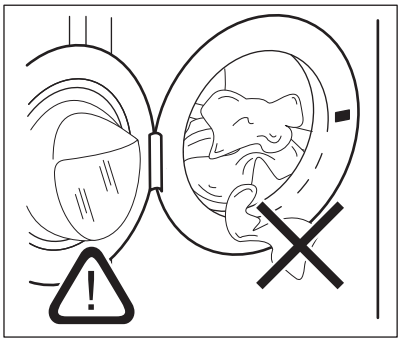

CAUTION! Make sure that no laundry gets caught between the seal and the door to avoid risk of water leakage and damage to the laundry.

Washing heavily oiled, greasy stains could cause damage to rubber parts of the washing machine.

FILLING THE DETERGENT AND ADDITIVES

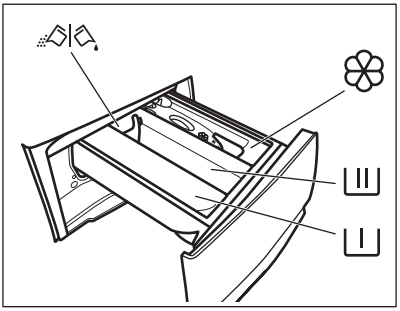

I	Compartment for prewash phase, soak programme or stain remover.
II	Compartment for washing phase.
❀	Compartment for liquid additives (fabric conditioner, starch).
MAX	Maximum level for quantity of liquid additives.
	Flap for powder or liquid detergent.

Always follow the instructions that you find on the packaging of the detergent products, but we recommend that you do not exceed the maximum indicated level (**MAX**). This quantity will however guarantee the best washing results.

After a washing cycle, if necessary, remove any detergent residue from the detergent dispenser.

CHECK THE POSITION OF THE DETERGENT FLAP

1. Pull out the detergent dispenser until it stops.

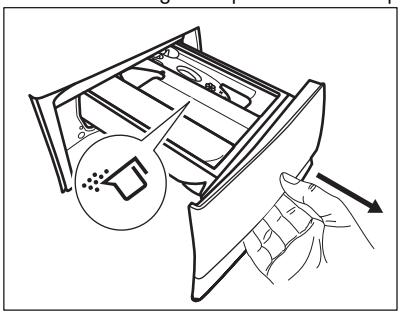

2. Press the lever down to remove the dispenser.
3. To use powder detergent, turn the flap up.
4. To use liquid detergent, turn the flap down.

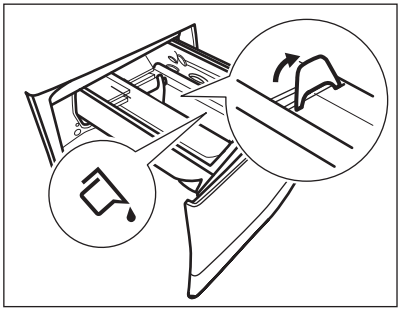

With the flap in the position **DOWN**:

- Do not use gelatinous or thick liquid detergents.
- Do not exceed to liquid detergent dose indicated on the flap.
- Do not set the prewash phase.
- Do not set the delay start function.

5. Measure out the detergent and the fabric conditioner.
6. Carefully close the detergent dispenser.

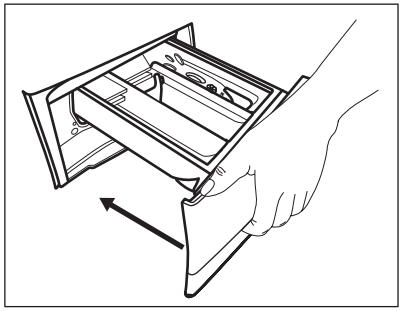

Make sure that the flap does not cause a blockage when you close the drawer.

SETTING A PROGRAMME

1. Turn the programme dial to select the desired washing programme.

The indicator of the Start/Pause ▷‖ button flashes. The display shows an indicative programme duration.

2. To change the temperature and/or the spin speed, touch the related buttons.
3. If desired, set one or more options by touching the related buttons. The related indicators illuminate on the display and the given information changes accordingly.

If a selection is **not possible** an acoustic signal sounds.

STARTING A PROGRAMME

Touch the Start/Pause button to start the programme. It is not possible to start the programme when the indicator of the button is off and doesn't flash (e.g. programme dial on a wrong position).
The related indicator stops flashing and stays on. The programme starts, the door is locked. The display shows the indicator.

The drain pump can operate shortly before the appliance fills water.

STARTING A PROGRAMME WITH THE DELAY START

1. Touch the Delay Start button repeatedly until the display shows the desired delay time. On the display the indicator shows

2. Touch the Start/Pause button. The appliance door locks and starts the countdown of the delay start. The display shows the indicator.
When the countdown is completed, the programme starts automatically.

Cancelling the delay start after the countdown has started

To cancel the delay start:

1. Touch the Delay Start button repeatedly until the display shows the desired delay time. On the display the indicator shows

Touch the Start/Pause button. The appliance lock the door and starts the countdown of the delay start. The display shows the indicator.
When the countdown is completed, the programme starts automatically.

2. Touch the Start/Pause button to pause the appliance. The related indicator flashes.
3. Touch the Delay Start button repeatedly until the display shows and the indicator goes off.
4. Touch the Start/Pause button again to start the programme immediately.

Changing the delay start after the countdown has started

To change the delay start:

1. Touch the Start/Pause button to pause the appliance. The related indicator flashes.
2. Touch the Delay Start button repeatedly until the display shows the desired delay time.
3. Touch the Start/Pause button again to start the new countdown.

THE AUTOADJUST SYSTEM LOAD DETECTION

The programme duration in the display is referred to a **medium/high load**.

After touching the Start/Pause button, the maximum declared load indicator goes off, the AutoAdjust System starts the laundry load detection:

1. The appliance detects the load in the first 30 seconds. In the programmes where FlexiTime is available, during this phase the FlexiTime bars ---- placed below the time digits play a simple animation. The drum rotates shortly.
2. The programme duration could be adjusted accordingly and could increase or decrease. After further 30 seconds, the water filling starts.

At the end of the load detection, **in case of drum overload**, the indicator MAX is flashing in the display:
In this case, for 30 seconds, it is possible to pause the appliance and remove the exceeding garments.
Once removed the exceeding garments, touch the Start/Pause button to start the programme again. The AutoAdjust phase can be repeated up to three times (see point 1).
Important! If the laundry amount will not be reduced, the washing programme starts anyway, despite the overload. In this case, it will be not possible to guarantee the best washing results.

About 20 minutes after the programme start, the programme duration could be adjusted again depending on the capacity of water absorption of the fabrics.

The AutoAdjust detection is carried out with complete washing programmes only and if the programme duration has not been reduced by means of the FlexiTime button.

INTERRUPTING A PROGRAMME AND CHANGING THE OPTIONS

When the programme is running, you can change **only some** options:

1. Touch the Start/Pause ▷|| button.

The related indicator flashes.

2. Change the options. The given information in the display changes accordingly.
3. Touch the button Start/Pause ▷|| again.

The washing programme continues.

CANCELLING A RUNNING PROGRAMME

1. Press the button ON/OFF to cancel the programme and to deactivate the appliance.
2. Press the button ON/OFF again to activate the appliance.

If the AutoAdjust System has completed and the water filling has already started, the new programme starts **without repeating the AutoAdjust System**. The water and the detergent are not drained out in order to avoid waste. The display shows the maximum duration of the programme, updating it about 20 minutes after the starting of the new programme.

There is also an alternative way of cancelling:
1. Rotate the selector knob to the "Reset" position • .

2. Wait for 1 second. The display shows ---- .
Now, you can set a new washing programme.

OPENING THE DOOR - ADDING GARMENTS

If the temperature and level of the water in the drum are too high and/or the drum is still rotating you should not open the door.

While a programme or the delay start operates, the appliance door is locked. The display shows the indicator 🔒.

1. Touch the Start/Pause ▷|| button.

In the display the related door lock indicator goes off.

2. Open the appliance door. If necessary, add or remove the items. Close the door and touch the Start/Pause ▷|| button.

The programme or the delay start continues.

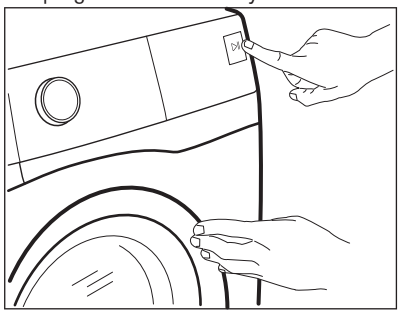

END OF THE PROGRAMME

When the programme has finished, the appliance stops automatically. The acoustic signals operate (if they are active). The display shows 0:00

The indicator of the Start/Pause ▷|| button goes off.

The door unlocks and the indicator 🔒 goes off.

1. Press button ON/OFF to deactivate the appliance.

After five minutes from the end of the programme, the energy saving function automatically deactivates the appliance.

When you activate the appliance again, the display shows the end of the previous programme. Turn the programme dial to set a new cycle.

2. Remove the laundry from the appliance.
3. Make sure that the drum is empty.
4. Keep the door and the detergent dispenser slightly ajar to prevent mildew and odours.
5. Close the water tap.

DRAINING WATER OUT AFTER END OF CYCLE

If you have chosen a programme or an option that does not empty out the water of the last rinse, the programme is completed, but:

- The time area shows 0:00 and the display shows the door locked 🔒.
- The drum still turns at regular intervals to prevent creases in the laundry.
- The door stays locked.

- You must drain the water to open the door:

1. If necessary, touch the Spin button to decrease the spin speed proposed by the appliance.
2. Press theStart/Pause button:
   - If you have set Rinse Hold the appliance drains the water and spins.
   - If you have set Night the appliance only drains the water

The option indicator Rinse Hold disappears.

3. When the programme is completed and the door locked indicator goes off, you can open the door.
4. Press the ON/OFF button for a few seconds to deactivate the appliance.

STAND-BY OPTION

The Stand-by function automatically deactivates the appliance to reduce the energy consumption when:

- You do not use the appliance for 5 minutes . Press the button ON/OFF to activate the appliance again.
- 5 minutes after the end of the washing programme
  Press the ON/OFF button to activate the appliance again.
  The display shows the end of the last programme.
  Turn the programme dial to set a new cycle.

If the dial is rotated to the "Reset" position , the appliance automatically turns off in 30 seconds.

If you set a programme or an option that ends with water in the drum, the Stand-by function **doesn't deactivate** the appliance to remind you to drain the water.

HINTS AND TIPS

WARNING! Refer to Safety chapters.

THE LAUNDRY LOAD

- Divide the laundry into: white, coloured, synthetics, delicates and wool.
- Follow the washing instructions on the laundry care labels.
- Do not wash white and coloured items together.
- Some coloured items can discolour with the first wash. We recommend that you wash them separately for the first couple of times.
- Turn multilayered fabrics, wool and items with printed illustrations inside out.
- Pre-treat stubborn stains.
- Wash stubborn stains with a special detergent.
- Be careful with curtains. Remove the hooks and put the curtains in a washing bag or pillowcase.
- A very small load can cause balance problems with the spin phase leading to excessive vibration. If this occurs:
  a. interrupt the programme and open the door (refer to "Daily Use" chapter);
  b. manually redistribute the load so that the items are spaced evenly around the tub;
  c. press the Start/Pause button. The spin phase continues.
- Avoid washing garments full of long animal hair or poor quality garments releasing lots of fluff that could block the drain circuit and therefore requiring the Service assistance.
- Button up pillowcases, close zippers, hooks and poppers. Tie up belts, cords, shoelaces, ribbons and any other loose elements.
- Do not wash laundry without hems or with cuts. Use a washing bag to wash small and/or delicate items (e.g. underwired bras, belts, tights, shoelaces, ribbons, etc.).

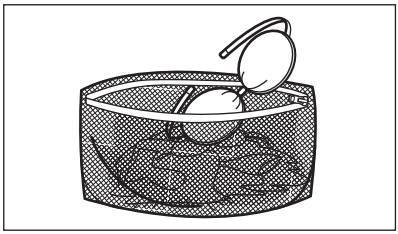

- Empty pockets and unfold the items.

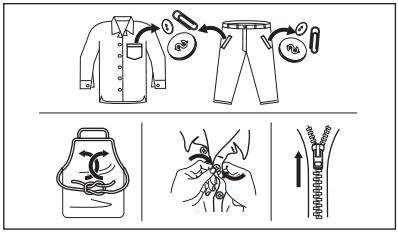

STUBBORN STAINS

For some stains, water and detergent is not sufficient.

We recommend that you pre-treat these stains before you put the items in the appliance.

Special stain removers are available. Use the special stain remover that is applicable to the type of stain and fabric.

DETERGENT TYPE AND QUANTITY

The choice of detergent and use of correct quantities not only affects your wash performance, but also helps to avoid waste and protect the environment:

- Use only detergents and other treatments specially made for washing machines. First, follow these generic rules:
  - powder detergents for all types of fabric, excluding delicate. Prefer powder detergents containing bleach for whites and laundry sanitization,
  - liquid detergents, preferably for low temperature wash programmes (60 °C max) for all types of fabric, or special ones for woollens only.
- The choice and quantity of detergent will depend on: type of fabric (delicates, woollens, cottons, etc), the colour of clothes, size of the load, degree of soiling, wash temperature and hardness of the water used.
- Follow the instructions that you find on packaging of the detergents or other treatments without exceeding the indicated maximum level (**MAX**).
- Do not mix different types of detergents.
- Use less detergent if:
  - you are washing a small load,
  - the laundry is lightly soiled,
  - there is large amounts of foam during washing.
- When using detergent tabs or pods, always put them inside the drum, not in the detergent dispenser.

Insufficient detergent may cause:

- unsatisfactory washing results,
- the wash load to turn grey,
- greasy clothes,
- mould in the appliance.

Excessive detergent may cause:

- sudsing,
- reduced washing effect,
- inadequate rinsing,
- a greater impact for the environment.

ECOLOGICAL HINTS

To save water, energy and to help protect the environment, we recommend that you follow these tips:

- **Normally soiled laundry** may be washed **without prewash** in order to save detergent, water and time (the environment is protected too!).
- Loading the appliance to the **maximum capacity indicated for each programmes helps to reduce energy and water consumption**.
- With adequate pre-treatment, stains and limited soiling can be removed; the laundry can then be washed at a lower temperature.
- To use the correct quantity of detergent, refer to the quantity suggested by the detergent producer and check the water hardness of you domestic system. Refer to 'Water hardness'.
- Set the **maximum possible spin speed** for the selected washing programme **before drying your laundry in a tumble dryer**. This will save energy during drying!

WATER HARDNESS

If the water hardness in your area is high or moderate, we recommend that you use a water softener for washing machines. In areas where the water hardness is soft it is not necessary to use a water softener.

To find out the water hardness in your area, contact your local water authority.

Use the correct quantity of water softener. Follow the instructions that you find on the packaging of the product.

CARE AND CLEANING

WARNING! Refer to Safety chapters.

PERIODIC CLEANING SCHEDULE

Periodic cleaning helps to extend the life of your appliance.

After each cycle, keep the door and the detergent dispenser slightly ajar to get air circulation and dry the humidity inside the appliance: this will prevent mildew and odours.

If the appliance is not used for a long time: close the water tap and unplug the appliance.

Indicative periodic cleaning schedule:

Descaling	Twice a year
Maintenance wash	Once a month
Clean door seal	Every two months
Clean drum	Every two months
Clean detergent dispenser	Every two months
Clean the inlet hose and the valve filter	Twice a year

The following paragraphs explain how you should clean each part.

REMOVING FOREIGN OBJECTS

Make sure that pockets are empty and all loose elements are tied up before running your cycle. Refer to 'The laundry load' in 'Hints and tips'.

Remove any foreign objects (such as metal clip, buttons, coins, etc) that you may find in the door seal, the inlet hose filter and the drum. Refer to 'Door seal with double lip trap', 'Cleaning the drum' and 'Cleaning the inlet hose and the valve filter' paragraphs. If necessary, please contact the Authorised Service Centre.

EXTERNAL CLEANING

Clean the appliance with mild soap and warm water only. Fully dry all the surfaces. Do not use a scouring pads or any scratching material.

CAUTION! Do not use alcohol, solvents or chemical products.

CAUTION! Do not clean the metal surfaces with chlorine-based detergent.

DESCALING

If the water hardness in your area is high or moderate, we recommend that you use a water descaling product for washing machines.

Regularly examine the drum to check for limescale.
Regular detergents already contain water softening agents, but we recommend to run a cycle with an empty drum and a descaling product occasionally.

Always follow the instructions that you find on the packaging of the product.

MAINTENANCE WASH

The repeated and prolonged use of low temperature programmes can cause detergent deposits, fluff residues, bacterial growth inside the drum and the tub. This could generate bad odours and mildew. To eliminate these deposits and clean the inner part of the appliance, run a maintenance wash regularly (at least once a month).

Refer to "Cleaning the drum" paragraph.

DOOR SEAL WITH DOUBLE LIP TRAP

This appliance is designed with a **self cleaning draining system**, allowing light fluff fibers that fall off the clothes to be drained out with the water. Regularly examine the seal. Coins, buttons, other small items can be recovered at the end of the cycle.

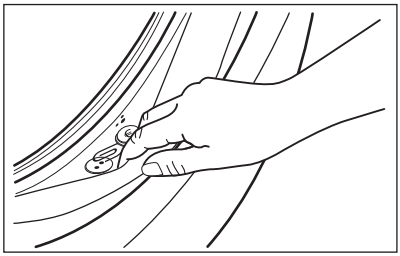

Clean it when needed, using ammonia cream cleanser agent without scratching the seal surface.

Always obey the instructions that you find on the packaging of the product.

CLEANING THE DRUM

Regularly examine the drum to prevent unwanted deposits.

Rust deposits in the drum may occur due to rusting foreign body in the washing or tap water containing iron

Clean the drum with special products for stainless steel.

Always follow the instructions that you find on the packaging of the product. Do not clean the drum with acidic descaling products, scouring products containing chlorine or iron or steel wool.

For a thorough clean:

1. Remove all laundry from the drum.
2. Run a Cottons programme with the highest temperature.
3. Add a small quantity of powder detergent into the empty drum, in order to rinse out any left residues.

Occasionally, at the end of a cycle the display may show the icon ⁘: this is a recommendation to perform the “drum cleaning”. Once the drum cleaning has been performed, the icon disappears.

CLEANING THE DETERGENT DISPENSER

To prevent possible deposits of dried detergent or clotted fabric softener and/or formation of mould in the detergent dispenser drawer, once in a while carry out the following cleaning procedure:

1. Open the drawer. Press the catch downwards as indicated in the picture and pull it out.

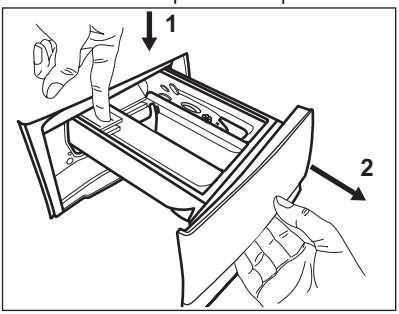

2. Remove the top part of the additive compartment to aid cleaning and flush it out under running warm water, to remove any traces of accumulated detergent. After cleaning, put the top part back into position.

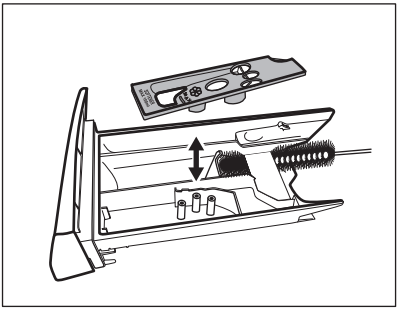

3. Make sure that all detergent residue is removed from the upper and lower part of the recess. Use a small brush to clean the recess.

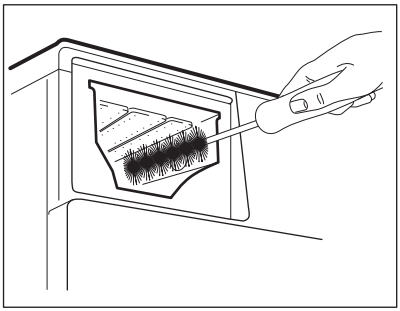

4. Insert the detergent drawer into the guide rails and close it. Run the rinsing programme without any clothes in the drum.

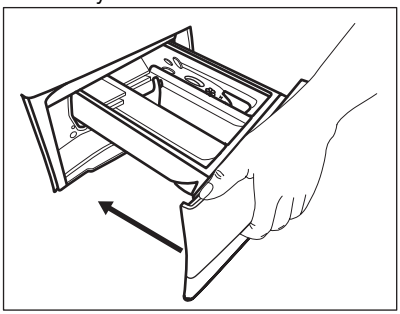

CLEANING THE INLET HOSE AND THE VALVE FILTER

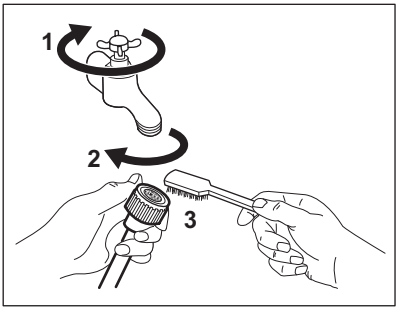

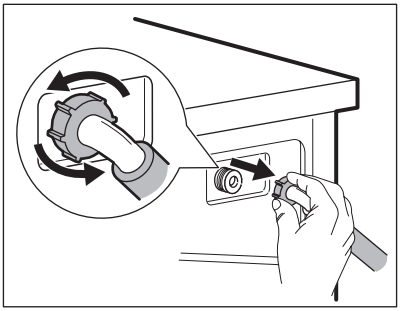

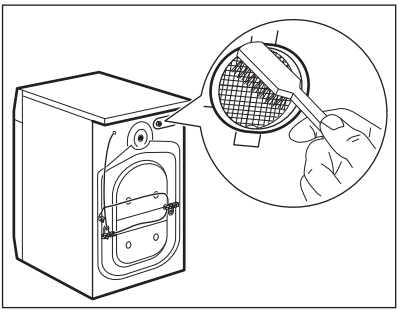

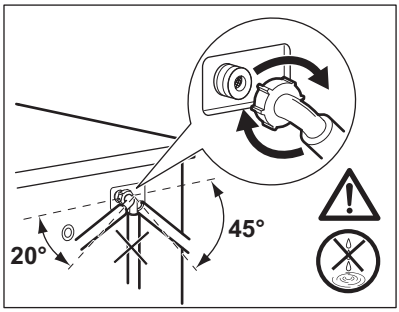

EMERGENCY DRAIN

If the appliance cannot drain the water, carry out the same procedure, described in 'Cleaning the drain pump' paragraph. If necessary, clean the pump.

FROST PRECAUTIONS

If the appliance is installed in an area where the temperature can reach values around 0° C or drop below, remove the remaining water from the inlet hose and the drain pump.

1. Disconnect the mains plug from the mains socket.
2. Close the water tap.
3. Put the two ends of the inlet hose in a container and let the water flow out of the hose.
4. Empty the drain pump. Refer to the emergency drain procedure.
5. When the drain pump is empty, install the inlet hose again.

WARNING! Make sure that the temperature is higher than 0 °C before you use the appliance again. The manufacturer is not responsible for damages caused by low temperatures.

TROUBLESHOOTING

WARNING! Refer to Safety chapters.

ALARM CODES AND POSSIBLE FAILURES

The appliance does not start or it stops during operation. First try to find a solution to the problem (refer to the tables).



WARNING! Deactivate the appliance before carrying out any check.

With some problems, the display shows an alarm code and the Start/Pause ▷‖ **button may flash continuously:**

Problem	Possible solution
E 10 The appliance does not fill with water properly.	▪ Make sure that the water tap is open. ▪ Make sure that the pressure of the water supply is not too low. For this information, contact your local water authority. ▪ Make sure that the water tap is not clogged. ▪ Make sure that the inlet hose has no kinks, damages or bends. ▪ Make sure that the connection of the water inlet hose is correct. ▪ This problem may be also caused by the clogged drain circuit. Please contact the Authorised Service Centre. ▪ Make sure that the filter of the inlet hose and the filter of the valve are not clogged. Refer to 'Care and cleaning'.
E20 The appliance does not drain the water.	▪ Make sure that the sink spigot is not clogged. ▪ Make sure that the drain hose has no kinks or bends. ▪ This problem may be caused by the clogged drain circuit. Please contact the Authorised Service Centre. ▪ Make sure that the connection of the drain hose is correct. ▪ Set the drain programme if you set a programme without drain phase. ▪ Set the drain programme if you set an option which ends with water in the tub.
E40 The appliance door is open or not closed correctly.	▪ Make sure that the door is properly closed.
E91 Internal fail. No communication between electronic elements of the appliance.	▪ The programme was not finished properly or the appliance stopped too early. Switch the appliance off and on again. ▪ If the alarm code appears again, contact the Authorised Service Centre.
EH0 The mains supply is unstable.	▪ Wait until mains supply is stable.

If the display shows other alarm codes, deactivate and activate the appliance. If the problem continues, contact the Authorised Service Centre.
In case of different problem with the washing machine check the table below for possible solutions.

Problem	Possible solution
The programme does not start.	▪ Make sure that the mains plug is connected to the mains socket. ▪ Make sure that the appliance door is closed. ▪ Make sure that there is no damaged fuse in the fuse box. ▪ Make sure that the Start/Pause ⏯ has been touched. ▪ If the delay start is set, cancel the setting or wait for the end of countdown. ▪ Deactivate the Child Lock function if it is on. ▪ Check the position of the knob on the selected programme.
The appliance fills with water and drains immediately.	▪ Make sure that the drain hose is in the correct position. The hose may be positioned too low. Refer to "Installation instruction".
The spin phase does not operate or the washing cycle lasts longer than usual.	▪ Set the spin programme. ▪ This problem may be caused by the clogged drain circuit. Please contact the Authorised Service Centre. ▪ Adjust manually the items in the tub and start the spin phase again. This problem may be caused by balance problems.
There is water on the floor.	▪ Make sure that the couplings of the water hoses are tight and there is not water leakages. ▪ Make sure that the water inlet hose and the drain hose have no damages. ▪ Make sure you use the correct detergent and the correct quantity of it.
You cannot open the appliance door.	▪ Make sure that a washing programme that ends with water in tub, has not been selected. ▪ Make sure that the washing programme is finished. ▪ Set the drain or the spin programme if there is water in the drum. ▪ Make sure that the appliance receives electrical power. ▪ This problem may be caused by a failure of the appliance. Contact the Authorised Service Centre.
The appliance makes an unusual noise and vibrates.	▪ Make sure the levelling of the appliance is correct. Refer to "Installation instruction". ▪ Make sure that the packaging and/or the transit bolts are removed. Refer to "Installation instruction". ▪ Add more laundry in the drum. The load may be too small.
The programme duration increases or decreases during programme execution.	▪ The AutoAdjust System is able to adjust the programme duration according to the type and the laundry load size. Refer to "The AutoAdjust System load detection" in "Daily Use" chapter.
The washing results are not satisfactory.	▪ Increase the detergent quantity or use a different detergent. ▪ Use special products to remove the stubborn stains before you wash the laundry. ▪ Make sure that you set the correct temperature. ▪ Decrease the laundry load.
Too much foam in the drum during the washing cycle.	▪ Reduce the quantity of detergent.

Problem	Possible solution
After the washing cycle, there are some detergent residues in the dispenser drawer.	▪ Make sure that the flap is in the correct position (UP for powder detergent - DOWN for liquid detergent). ▪ Make sure you have used the detergent dispenser according the indications given in this user manual.

After the check, activate the appliance. The programme continues from the point of interruption.
If the problem occurs again, contact the Authorised Service Centre.
The necessary data for the service centre are on the rating plate.

CONSUMPTION VALUES

INTRODUCTION

This user manual reports two different tables in order to favour a gradual passage from a regulation to the other:
- Regulation EU 1061/2010, valid up to 28th of February 2021, is related to the Energy Efficiency classes from **A+++** to **D**,
- Regulation EU 2019/2023, valid from 1st March 2021, is related to the Energy Efficiency classes from **A** to **G** set by Regulation EU 2019/2014.

See the web link **www.theenergylabel.eu** for detailed information about Energy Label.

The QR code on the energy label supplied with the appliance provides a web link to the information related to the performance of the appliance in the EU EPREL database. Keep the energy label for reference together with the user manual and all other documents provided with this appliance.
It is also possible to find the same information in EPREL using the link **https://eprel.ec.europa.eu** and the model name and product number that you find on the rating plate of the appliance. Refer to 'Product description' chapter for the position of the rating plate.

LEGEND

kg	Laundry load.	**h:mm**	Programme duration.
kWh	Energy consumption.	**°C**	Temperature in the laundry.
Litres	Water consumption.	**rpm**	Spin speed.
%	Remaining moisture at the end of spinning phase. The higher is the spin speed, the higher is the noise and the lower is the remaining moisture.		

Values and programme duration may differ depending on different conditions (e.g. room temperature, water temperature and pressure, load size and type of laundry, supply voltage) and also if you change the default setting of a programme.

ACCORDING TO COMMISSION REGULATION EU 2019/2023

Eco 40-60 programme	kg	kWh	Litres	h:mm	%	°C	rpm[1)]
Full load	10	1.060	66	3:50	52	39	1351
Half load	5	0.710	52	2:50	52	36	1351
Quarter load	2,5	0.410	42	2:50	54	29	1351

1) Maximum spin speed.

Power consumption in different modes

Off (W)	Stand-by (W)	Delay start (W)
0.30	0.30	4.00

Time to Off/Standby mode is 15 minutes maximum.

ACCORDING TO REGULATION 1061/2010

Standard cotton programmes.	Load (kg)	Energy consumption (kWh)	Water consumption (litres)	Approximate programme duration (minutes)	Remaining moisture (%)[1)]
For Standard 60°C cotton: Set Eco 40-60 at 60°C	10	0,94	57	263	52
For Standard 60°C cotton: Set Eco 40-60 at 60°C	5	0,53	46	245	52
For Standard 40°C cotton: Set Eco 40-60 at 30°C	5	0,52	46	243	52

1) At the end of spin phase.

Off Mode (W)	Left On Mode (W)
0.30	0.30

The information given in the chart above is compliant with the EU Commission regulation 1015/2010 implementing directive 2009/125/EC .

COMMON PROGRAMMES

These values are indicative only.

Programme	kg	kWh	Litres	h:mm	%	°C	rpm[1)]
Cottons[2)] 90°C	10	2.90	85	4:05	52	85	1400
Cottons 60°C	10	1.80	80	3:40	52	55	1400
Cottons[3)] 20°C	10	0.40	80	3:15	52	20	1400
Synthetics 40°C	4	0.85	75	2:30	35	40	1200
Delicates[4)] 30°C	2	0.35	60	1:25	35	30	1200
Wool 30°C	1,5	0.30	70	1:05	30	30	1200

1) Reference indicator of the spin speed.
2) Suitable for washing heavily soiled textiles.
3) Suitable for washing lightly soiled cottons.
4) It also performs as quick washing cycle for lightly soiled laundry.

ENVIRONMENTAL CONCERNS

Recycle materials with the symbol . Put the packaging in relevant containers to recycle it. Help protect the environment and human health by recycling waste of electrical and electronic appliances. Do not dispose of appliances marked with the symbol with the household waste. Return the product to your local recycling facility or contact your municipal office.

WWW.ZANUSSI.COM/SHOP



CE

192915280-A-322020