User Manual

GETTING STARTED? EASY.



ZWF845B4PW

EN User Manual
Washing Machine

ZANUSSI

VISIT OUR WEBSITE TO:



Get usage advice, brochures, trouble shooter, service and repair information:
www.zanussi.com/support

⚠ SAFETY INFORMATION

Before the installation and use of the appliance, carefully read the supplied instructions. The manufacturer is not responsible for any injuries or damage that are the result of incorrect installation or usage. Always keep the instructions in a safe and accessible location for future reference.

CHILDREN AND VULNERABLE PEOPLE SAFETY

- This appliance can be used by children aged from 8 years and above and persons with reduced physical, sensory or mental capabilities or lack of experience and knowledge if they have been given supervision or instruction concerning the use of the appliance in a safe way and understand the hazards involved.
- Children between 3 and 8 years of age and persons with very extensive and complex disabilities shall be kept away from the appliance unless continuously supervised.
- Children of less than 3 years of age should be kept away from the appliance unless continuously supervised.
- Do not let children play with the appliance.
- Keep all packaging away from children and dispose of it appropriately.
- Keep detergents away from children.
- Keep children and pets away from the appliance when the door is open.
- Children shall not carry out cleaning and user maintenance of the appliance without supervision.

GENERAL SAFETY

- Do not change the specification of this appliance.
- This appliance is intended to be used in household and similar applications such as:

  - staff kitchen areas in shops, offices and other working environments;
  - by clients in hotels, motels, bed & breakfast and other residential type environments;
  - areas for communal use in blocks of flats or in launderettes.
- Do not exceed the maximum load of 8 kg (refer to the "Programme chart" chapter).
- The operating water pressure at the water entry point from the outlet connection must be between 0.5 bar (0.05 MPa) and 8 bar (0.8 MPa).
- The ventilation opening in the base must not be covered by a carpet, mat, or any floor covering.
- The appliance must be connected to the water mains using the new supplied hose sets, or other new hose sets supplied by the Authorised Service Centre.
- Old hose sets must not be reused.
- If the mains power supply cable is damaged, it must be replaced by the manufacturer, its Authorised Service Centre or similarly qualified persons to avoid an electrical hazard.
- Before any maintenance operation, deactivate the appliance and disconnect the mains plug from the socket.
- Do not use high pressure water sprays and/or steam to clean the appliance.
- Clean the appliance with a moist cloth. Use only neutral detergents. Do not use abrasive products, abrasive cleaning pads, solvents or metal objects.

SAFETY INSTRUCTIONS

INSTALLATION

The installation must comply with relevant national regulations.

- Remove all the packaging and the transit bolts including rubber bush with plastic spacer.
- Keep the transit bolts in a safe place. If the appliance is to be moved in the future they must be reattached to lock the drum to prevent an internal damage.
- Always take care when moving the appliance as it is heavy. Always use safety gloves and enclosed footwear.
- Follow the installation instructions supplied with the appliance.
- Do not install or use a damaged appliance.
- Do not install or use the appliance where the temperature can be less than 0°C or where it is exposed to the weather.
- The floor area on which the appliance is to be installed must be flat, stable, heat resistant and clean.

- Make sure that there is air circulation between the appliance and the floor.
- When the appliance is in its permanent position, check if it is levelled correctly with the aid of a spirit level. If it is not, adjust the feet accordingly.
- Do not install the appliance directly above a floor drain.
- Do not spray water on the appliance and do not expose it to excessive humidity.
- Do not install the appliance where the appliance door cannot be fully opened.
- Do not put a closed container to collect possible water leakage under the appliance. Contact the Authorised Service Centre to ensure which accessories can be used.

ELECTRICAL CONNECTION



WARNING! Risk of fire and electric shock.

- The appliance must be earthed.
- Always use a correctly installed shockproof socket.
- Make sure that the parameters on the rating plate are compatible with the electrical ratings of the mains power supply.
- Do not use multi-plug adapters and extension cables.
- Make sure not to cause damage to the mains plug and to the mains cable. Should the mains cable need to be replaced, this must be carried out by our Authorised Service Centre.
- Connect the mains plug to the mains socket only at the end of the installation. Make sure that there is access to the mains plug after the installation.
- Do not touch the mains cable or the mains plug with wet hands.
- Do not pull the mains cable to disconnect the appliance. Always pull the mains plug.
- This appliance is fitted with a 13 A mains plug. If it is necessary to change the mains plug fuse, use only a 13 A ASTA (BS 1362) fuse (UK and Ireland only).

WATER CONNECTION

- Do not cause damage to the water hoses.
- Before connection to new pipes, pipes not used for a long time, where repair work has been carried out or new devices fitted (water meters, etc.), let the water flow until it is clean and clear.
- Ensure that there are no visible water leaks during and after the first use of the appliance.
- Do not use an extension hose if the inlet hose is too short. Contact the Authorised Service Centre for the replacement of the inlet hose.
- When unpacking the appliance, It is possible to see water flowing from the drain hose. This is due to the testing of the appliance with the use of water in the factory.
- You can extend the drain hose to maximum 400 cm. Contact the Authorised Service Centre for the other drain hose and the extension.
- Make sure that there is access to the tap after the installation.

USE



WARNING! Risk of injury, electric shock, fire, burns or damage to the appliance.

- Follow the safety instructions on the detergent packaging.
- Do not put flammable products or items that are wet with flammable products in, near or on the appliance.
- Do not wash fabrics which are heavily soiled with oil, grease or other greasy substances. It can damage rubber parts of the washing machine. Prewash such fabrics by hand before loading them into the washing machine.
- Do not touch the glass door while a programme operates. The glass can get hot.
- Make sure that all metal objects are removed from the laundry.

INTERNAL LIGHTING



WARNING! Risk of injury.

- Concerning the lamp(s) inside this product and spare part lamps sold separately: These lamps are intended to withstand extreme physical conditions in household appliances, such as temperature, vibration, humidity, or are intended to signal information about the operational status of the appliance. They are not intended to be used in other applications and are not suitable for household room illumination.
- To replace the internal lighting, contact the Authorised Service Centre.

SERVICE

- To repair the appliance contact the Authorised Service Centre. Use original spare parts only.
- Please note that self-repair or non-professional repair can have safety consequences and might void the guarantee.
- The following spare parts will be available for 10 years after the model has been discontinued: motor and motor brushes, transmission between motor and drum, pumps, shock absorbers and

springs, washing drum, drum spider and related ball bearings, heaters and heating elements, including heat pumps, piping and related equipment including hoses, valves, filters and aquastops, printed circuit boards, electronic displays, pressure switches, thermostats and sensors, software and firmware including reset software, door, door hinge and seals, other seals, door locking assembly, plastic peripherals such as detergent dispensers. Please note that some of these spare parts are only available to professional repairers, and that not all spare parts are relevant for all models.

DISPOSAL

WARNING! Risk of injury or suffocation.

- Disconnect the appliance from the mains electrical and water supplies.
- Cut off the mains electrical cable close to the appliance and dispose of it.
- Remove the door catch to prevent children or pets from becoming trapped in the drum.
- Dispose of the appliance in accordance with local requirements for the disposal of Waste Electrical and Electronic Equipment (WEEE).

PRODUCT DESCRIPTION

APPLIANCE OVERVIEW

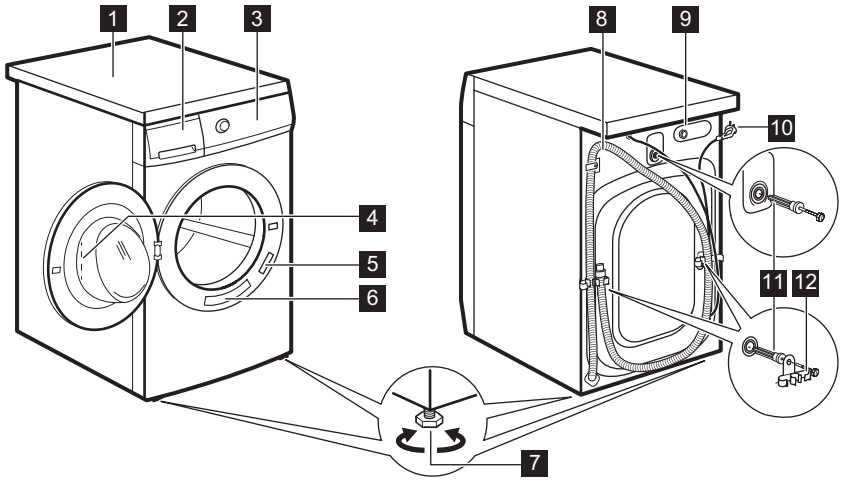

1 Worktop
2 Detergent dispenser
3 Control panel
4 Door handle
5 Rating plate
6 Quick Reminder sticker
7 Feet for levelling the appliance
8 Drain hose
9 Inlet hose connection
10 Mains cable
11 Transit bolts
12 Hose support

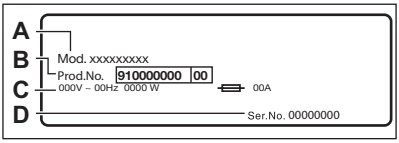

The rating plate reports the model name (**A**), product number (**B**),electrical ratings (**C**) and serial number (**D**).

TECHNICAL DATA

Dimension	Width/ Height/ Total depth	59,6 cm /84,7 cm /57,7 cm
Electrical connection	Voltage Overall power Fuse Frequency	230-240 V 2200 W 13 A 50 Hz
Level of protection against ingress of solid particles and moisture ensured by the protective cover, except where the low voltage equipment has no protection against moisture		IPX4
Water supply pressure **1)**	Minimum Maximum	0.5 bar (0.05 MPa) 8 bar (0.8 MPa)
Water supply **2)**		Cold water
Maximum Load	Cotton	8 kg
Spin Speed	Maximum spin speed	1351 rpm

1) The appliance works correctly if the water pressure is not lower than 0.05 MPa (0.5 bar). If you cannot connect the water inlet hose to the cold water tap of the primary hydraulic system, connect it to your domestic cold water storage system. Make sure not to exceed a distance of 5.02 m (16.5 ft) between the appliance inlet hose and the bottom of the water storage tank.
2) Connect the water inlet hose to a water tap with a 3/4" thread.

INSTALLATION

WARNING! Refer to Safety chapters.

CAUTION! Accessories delivered with the appliance may vary depending on the model.

UNPACKING

1. Open the door. Remove all the items from the drum.

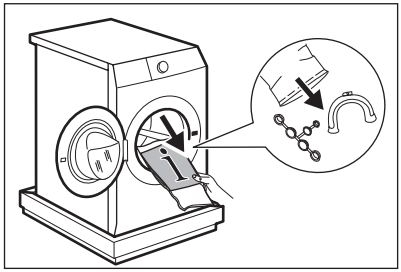

2. Put the packaging element on the floor behind the appliance and carefully put it down onto its rear side. Remove the polystyrene protection from the bottom.

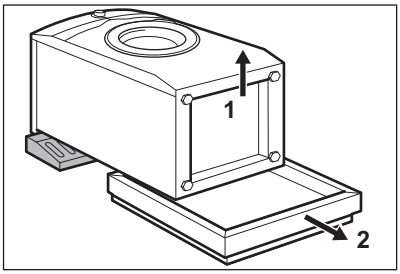

CAUTION! Do not lay washing machine on its front.

3. Put the appliance back into an upright position. Remove the power supply cable and the drain hose from the hose holders.

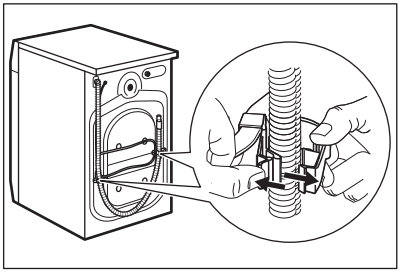

WARNING! It is possible to see water flowing from the drain hose. This is because the washing machine has been tested at the factory.

4. Remove the three transit bolts and pull out the plastic spacers.

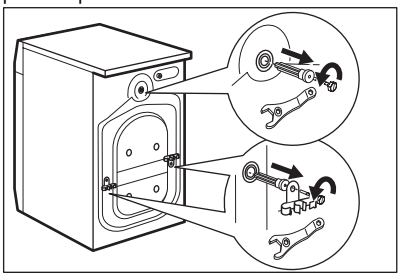

5. Put the plastic caps, that you find in the user manual bag, in the holes.

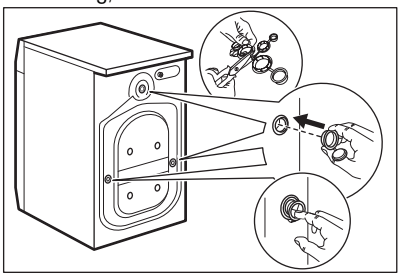

We recommend that you keep the packaging and the transit bolts for any transport of the appliance.

INFORMATION FOR INSTALLATION

Positioning and levelling

Adjust the appliance correctly to prevent vibration, noise and movement of the appliance when it operates.

1. Install the appliance on a flat hard floor. The appliance must be levelled and stable. Make sure that the appliance does not touch the wall or other units and there is air circulation below the appliance.

2. Loosen or tighten the feet to adjust the level. All feet must rest firmly on the floor.

WARNING! Do not put cardboard, wood or equivalent materials below the appliance feet to adjust the level.

The inlet hose

CAUTION! Make sure there is no damage to hoses and there are no leaks from the couplings. Do not use an extension hose if the inlet hose is too short. Contact the service centre for a replacement inlet hose.

1. Connect the water inlet hose to the back of the appliance.

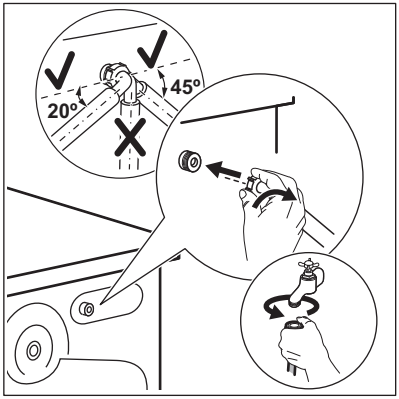

2. Position it toward left or right depending on the positon of the water tap. Make sure that the inlet hose is not in vertical position.

3. If necessary, loosen the ring nut to set it in the correct position.

4. Connect the water inlet hose to the cold water tap with 3/4" thread.

Water drainage

The drain hose should stay at a height of no less than 60 cm and not more than 100 cm.

You can extend the drain hose to maximum 400 cm. Contact the authorised service centre for the other drain hose and the extension.

It is possible to connect the drain hose in different ways:

1. Make a U shape with the drain hose and put it around the plastic hose guide.

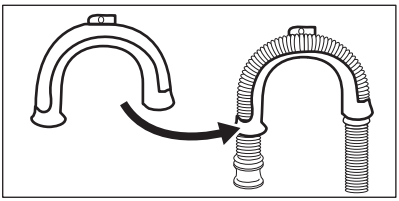

2. On the edge of a sink - Fasten the guide to the water tap or to the wall.

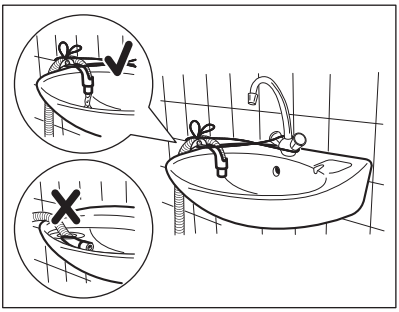

Make sure that the plastic guide cannot move when the appliance drains and the drain hose end is not immersed in the water. There may be a return of dirty water into the appliance.

3. If the end of the drain hose looks like this (see the picture), you can push it directly into the stand pipe.

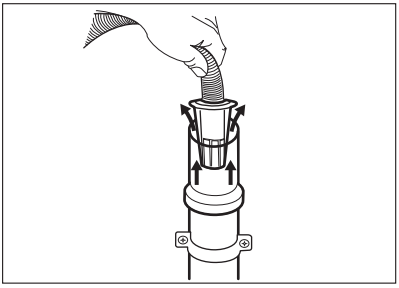

4. To a stand pipe with vent hole - Insert the drain hose directly into a drain pipe. Refer to the illustration.

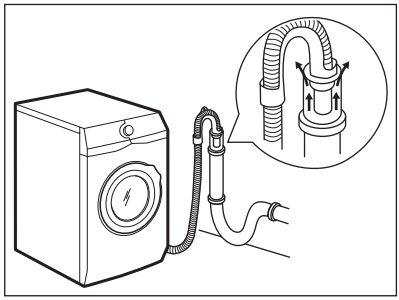

The end of the drain hose must always be ventilated , i.e. the inner diameter of the drain pipe (min. 38 mm - min. 1.5") must be larger than the external diameter of the drain hose.

5. Without the plastic hose guide, to a sink spigot- Put the drain hose in the spigot and tighten it with a clamp. Refer to the illustration.

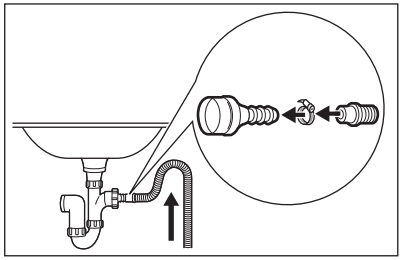

Make sure that the drain hose makes a loop to prevent particles going into the appliance from the sink.

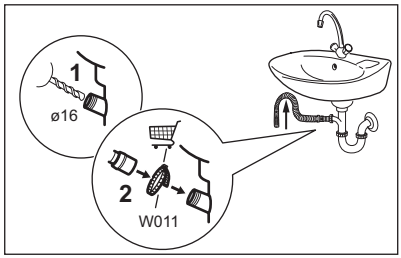

Connect the drain hose to the spigot and tighten it with a clamp. Make sure that the drain hose makes a loop to prevent particles going into the appliance from the sink.

6. Position the hose directly to a built-in drain pipe in the room wall and tighten it with a clamp.

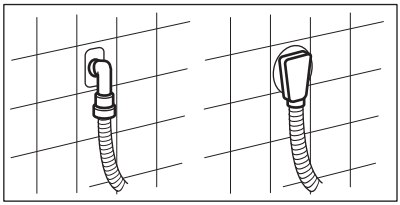

INSTALLATION ON SUSPENDED FLOORING

Suspended wooden floors are particularly susceptible to vibration.

To limit vibration we recommend placing a waterproof wooden panel, at least 15 mm thick, under the appliance. It should be screwed to at least 2 floor beams and should extend beyond the front feet.

If possible, install the appliance where the floor is more stable.

ELECTRICAL CONNECTION

At the end of installation you can connect the mains plug to the mains socket.

The rating plate on the inner edge of the appliance door and the 'Technical Data' chapter indicate the necessary electrical ratings. Make sure that they are compatible with the mains power supply.

Check that your domestic electrical installation can take the maximum load required, also taking into account any other appliances in use.

Connect the appliance to an earthed socket.

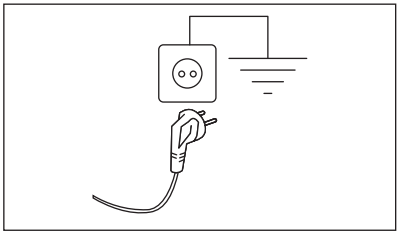

The power supply cable must be easily accessible after installing the appliance.

For any electrical work required to install this appliance, contact our Authorised Service Centre.

The manufacturer does not accept any responsibility for damage or injury through failure to comply with the above safety precaution.

ACCESSORIES

AVAILABLE IN WWW.ZANUSSI.COM/SHOP OR FROM AUTHORISED DEALER

Read carefully the instructions supplied with the accessory.

Only appropriate accessories approved by ZANUSSI ensure the safety standards of the appliance. If unapproved parts are used, any claims will be invalidated.

FIXING PLATE KIT

If you install the appliance on a plinth that is not an accessory supplied by ZANUSSI, secure the appliance in the fixing plates.

Read carefully the instructions supplied with the accessory.

STACKING KIT

The tumble dryer can be stacked on the top of the washing machine **only by using the correct stacking kit.**.

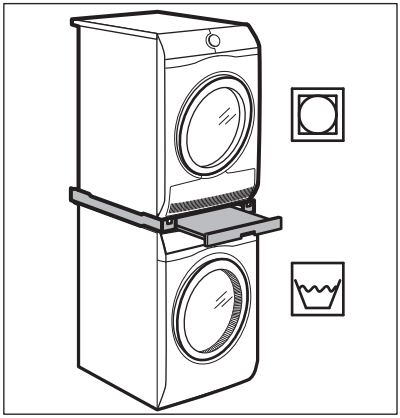

WARNING! Do not put the tumble dryer under the washing machine. Verify the compatible stacking kit by checking the depth of your appliances.

CONTROL PANEL

SPECIAL FEATURES

Your new washing machine meets all modern requirements for an effective treatment of laundry with low water, energy and detergent consumption and will care for fabrics.

This appliance is designed with a **self cleaning draining system**, allowing light fluff fibers that fall off the clothes to be drained out with the water, in such a way that there is no need to access this area for regular maintenance and cleaning. Refer to chapter 'Care and Cleaning' for best maintenance and care of the appliance.

CONTROL PANEL DESCRIPTION

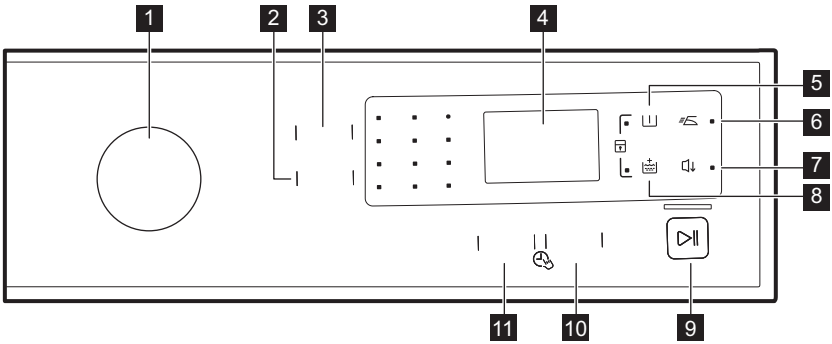

1 Programme knob
2 Spin reduction touchpad
3 Temp. touchpad
4 Display
5 Prewash touchpad
6 Easy Iron touchpad
7 Night touchpad
8 Extra Rinse touchpad
9 Start/Pause touchpad
10 Delay Start touchpad
11 FlexiTime touchpad

DISPLAY

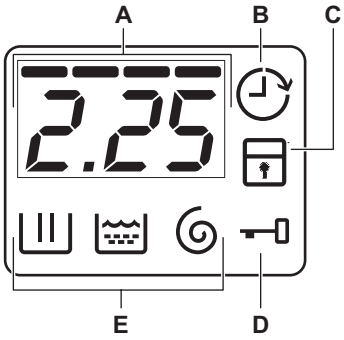

A. The time area:
- Programme time.
- The alarm codes. Refer to the chapter “Troubleshooting” for their description.
- The level of the FlexiTime ‾‾‾‾.

B. The Delay Start indicator.
C. The Child Lock indicator.
D. The Door Lock indicator:
- It is on, you cannot open the door.
- It is off, you can open the door.
- It flashes, you cannot open the door. Wait for some minutes until the indicator is off.

E. Washing phase indicators.
- : the washing phase
- : the rinses phase
- : the spin phase

PROGRAMME CHART

Programme Default temperature Temperature range	Reference spin speed Spin speed range	Maximum load	Programme description (Type of load and level of soiling)
Eco 40-60 40 °C [1] 60 °C - 30 °C[2]	1400 rpm (1400- 800 rpm)	8 kg	**White cotton and fast-coloured cotton**. Normally soiled items. The energy consumption decreases and the time of the washing programme is extended, ensuring good washing results.
Cottons 40°C 90°C - Cold	1400 rpm (1400- 800 rpm)	8 kg	**White cotton and coloured cotton**. Normally, heavily and lightly soiled items.
Synthetics 40°C 60°C - Cold	1200 rpm (1200- 800 rpm)	3 kg	**Synthetic items or mixed fabric items**. Normally soiled items.
Delicates 30°C 40°C - Cold	1200 rpm (1200- 800 rpm)	2 kg	**Delicate fabrics such as acrylics, viscose and mixed fabrics requiring gentler washing**. Normally and lightly soiled items.
Wool 40 °C 40°C - Cold	1200 rpm (1200- 800 rpm)	1,5 kg	**Machine washable wool, hand washable wool and other fabrics** with «hand washing» care symbol[3].
Denim 30 °C 40 °C - Cold	800 rpm (1200 - 800 rpm)	3 kg	**Special programme for Denim clothing with delicate washing phase to minimize colour fading and marks**. For better care a reduced load size is recommended.

Programme Default temperature Temperature range	Reference spin speed Spin speed range	Maximum load	Programme description (Type of load and level of soiling)
Sportswear 30 °C 40°C - Cold	1200 rpm (1200- 800 rpm)	3 kg	**Synthetic and delicate items**. Lightly soiled items or items to refresh.
Spin/Drain	1400 rpm (1400 -800 rpm)	8 kg	**All fabrics, except woollens and delicate fabrics**. To spin the laundry and to drain the water in the drum.
Rinse	1400 rpm (1400- 800 rpm)	8 kg	To rinse and spin the laundry. **All fabrics**, except woollens and very delicate fabrics. Reduce the spin speed accordingly to the type of laundry.
Dark Colours 40°C 60°C - Cold	1200 rpm (1200- 800 rpm)	8 kg	**Cotton items or mixed fabric items in dark colours.** Normally soiled items.
CleanBoost 60 °C	1400 rpm (1400- 800 rpm)	8 kg	White cotton items. This programme removes micro-organisms thanks to a washing phase with the temperature maintained above 60°C for several minutes. This helps remove germs, bacteria, micro-organism and particles. An additional rinsing phase ensures a proper removal of detergent residues and pollens/allergenic items. In this way the wash is more effective.
14min Refresh 30 °C	800 rpm (800- 800 rpm)	1,5 kg	**Synthetic and mixed fabric items.** Very light soiling and items to freshen up.
30min Rapid [4] 40°C 40°C - 30°C	1200 rpm (1200- 800 rpm)	3 kg	**Synthetic and mixed fabric items.** Lightly soiled items.

Programme Default temperature Temperature range	Reference spin speed Spin speed range	Maximum load	Programme description (Type of load and level of soiling)
60min EasyWash 30°C 60°C - 30°C	1400 rpm (1400- 800 rpm)	5 kg	Cotton and fast-coloured synthetic items. Complete washing programme that, in only 60 minutes, washes the daily soiled laundry intensively and ensures a good washing performance in a short time.

1) According to Commission Regulation EU 2019/2023, this programme at 40 °C is able to clean normally soiled cotton laundry declared to be washable at 40 °C or 60 °C, together in the same cycle.

For the reached temperature in the laundry, the programme duration and other data, please refer to 'Consumption Values' chapter.
The most efficient programmes in terms of energy consumption are generally those that perform at lower temperatures and longer duration.

2) Standard programmes for the Energy Label consumption values. According to EU regulation 1061/2010, this programme at 60 °C is the «Standard 60°C cotton programme» and at 30 °C is the «Standard 40°C cotton programme». They are the most efficient programmes in terms of combined energy and water consumption for washing normally soiled cotton laundry.

The water temperature of the washing phase may differ from the temperature declared for the selected programme.

3) During this cycle the drum rotates slowly to ensure a gentle wash. It can seem that the drum doesn't rotate or doesn't rotate properly, but this is normal for this programme.
4) With unbalanced small loads such as light synthetic garments mixed with much heavier garments like sponge, the duration of the programme may increase to execute spin speed properly.

Programme options compatibility

Programme	Spin							FlexiTime	Delay Start
Eco 40-60	■	■	■	■		■		■	■
Cottons	■	■	■	■	■	■	■	■	■
Synthetics	■	■	■	■	■	■	■	■	■
Delicates	■	■	■			■	■	■	■
Wool	■	■	■				■		■
Denim	■	■	■		■	■	■		■

Programme	Spin							FlexiTime	Delay Start
Sportswear	■	■	■	■	■	■			■
Spin/Drain	■	■							■
Rinse	■	■	■			■			■
Dark Colours	■	■	■	■		■		■	■
CleanBoost	■	■	■	■		■			■
14min Refresh		■	■						■
30min Rapid	■	■							■
60min EasyWash	■	■	■			■			■

Suitable detergents for washing programmes

Programme	Universal powder[1)]	Liquid Universal	Liquid for coloureds	Delicates woollens	Special
Eco 40-60	▲	▲	▲	--	--
Cottons	▲	▲	▲	--	--
Synthetics	▲	▲	▲	--	--
Delicates	--	--	--	▲	▲
Wool	--	--	--	▲	▲
Denim	--	--	▲	▲	▲
Sportswear	--	▲	▲	--	▲
Dark Colours	--	--	▲	▲	▲
CleanBoost	▲	▲	▲	--	--
14min Refresh	--	▲	▲	--	--
30min Rapid	--	▲	▲	--	--

Programme	Universal powder[1)]	Liquid Universal	Liquid for coloureds	Delicates woollens	Special
60min Easy-Wash	▲	▲	▲	--	--

1) At temperature higher than 60 °C the use of powder detergent is recommended.

▲ = Recommended -- = Not recommended

OPTIONS

TEMP.

Set this option to change the default temperature.

Indicator ✳ = cold water.

The indicator of the set temperature comes on.

SPIN

With this option you can change the default spin speed.

The indicator of the set speed comes on.

Additional spin options:

No Spin

- Set this option to deactivate all spin phases. Only the drain phase is available.
- The related indicator comes on.
- Set this option for very delicate fabrics.
- The rinses phase uses more water for some washing programmes.

Rinse Hold

- Set this option to prevent the laundry creases.
- The related indicator comes on.
- There is a water in the drum when the programme is completed.
- The drum turns regularly to prevent the laundry creases.
- The door stays locked. You must drain the water to unlock the door.

ⓘ To drain the water refer to 'At the end of the programme'.

PREWASH

With this option you can add a prewash phase to a washing programme.

The relevant indicator illuminates.

- Use this option to add a pre-wash phase before the washing phase.

This option is recommended for heavily soiled laundry, especially if containing sand, dust, mud and other solid particles.

ⓘ This option can increase the programme duration.

EASY IRON

The appliance carefully washes and spins the laundry to prevent the creases.

The appliance decreases the spin speed, uses more water and adapts the programme duration to the type of laundry.

The related indicator comes on.

EXTRA RINSE

With this option you can add a few rinses according to the selected washing programme.

Use this option for people with allergies to detergent residues and with sensitive skin.

ⓘ This option increases the programme duration.

The corresponding indicator illuminates.

NIGHT

The intermediate and the final spinning phases are suppressed and the programme ends with water in the drum. This helps to reduce creasing. As the programme is very quiet, it is suitable for use at night time when cheaper electricity tariffs are available. In some programmes the rinses are performed with more water. The door stays locked. The drum turns regularly to reduce creasing. You must drain the water to unlock the door. If you touch the Start/Pause ▷‖ button, the appliance performs the only draining phase.

The appliance empties the water out automatically after 18 hours approximately.

DELAY START

With this option you can delay the start of a programme to a more convenient time.

Touch the button repeatedly to set the required delay. The time increases from 30 minutes to 20 hours.

The display shows the indicator and the selected delay time. After touching the Start/Pause button, the appliance begins the countdown and the door is locked.

FLEXITIME

When you set a washing programme, the display shows the default duration and ––––– dashes.

Touch FlexiTime button to reduce the programme duration according to your needs. The display shows the new programme duration and a number of dashes will decrease accordingly:

––––– suitable for a full load of normally soiled garments.

–– to wash items with daily soil (max. half load recommended).

– to wash quickly items with almost no soil.

The FlexiTime is available only with the programmes in the table.

indicator	Eco 40-60	Cottons	Synthetics	Delicates	Dark Colours
––––1)	■	■	■	■	■
––		■	■	■	■
–	■	■	■	■	■

1) Defaullt duration for all programmes.

SETTINGS

CHILD LOCK

With this option you can prevent that the children play with the control panel.

- To **activate/deactivate** this option, press and at the same time until the indicator **comes on/goes off**.

You can activate this option:

- After you press : the options and the programme knob are locked.
- Before you press : the appliance cannot start.

PERMANENT EXTRA RINSE

With this option you can permanently have an extra rinse when you set a new programme.

- To **activate/deactivate** this option press and at the same time until the indicator **comes on/goes off**.

ACOUSTIC SIGNALS

The acoustic signals operate when:

- The programme is completed.
- The appliance has a malfunction.

To **deactivate/activate** the acoustic signals, press and at the same time for 3 seconds.

If you deactivate the acoustic signals, they continue operate when the appliance has a malfunction.

BEFORE FIRST USE

During installation or before first use you may observe some water in the appliance. This is residual water left in the appliance after a full functional test in the factory to ensure the appliance is delivered to customers in perfect working order and is no cause for concern.

1. Connect the mains plug to the mains socket.
2. Open the water tap.
3. Put a small quantity of detergent in the compartment for washing phase.
4. Set and start a programme for cotton at the highest temperature without laundry.

This removes all possible dirt from the drum and the tub.

DAILY USE

WARNING! Refer to Safety chapters.

LOADING THE LAUNDRY

1. Open the appliance door
2. Empty the pockets and unfold the items before you put them in the appliance.
3. Put the laundry in the drum, one item at a time.

Make sure not to put too much laundry in the drum.

4. Close the door firmly.

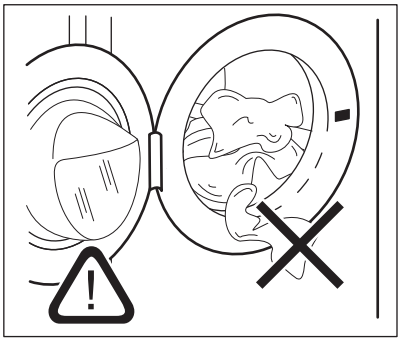

Make sure that no laundry gets caught between the seal and the door to avoid risk of water leakage and damage to the laundry.

Washing heavily oiled, greasy stains could cause damage rubber parts of the washing machine.

FILLING THE DETERGENT AND ADDITIVES

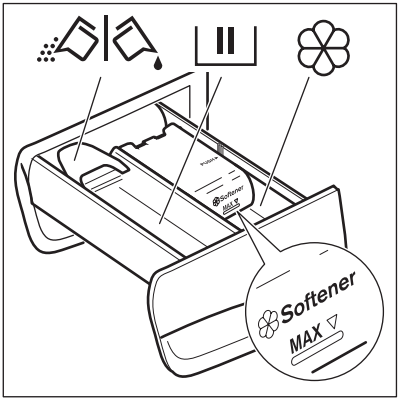

II	Compartment for washing phase. If you use liquid detergent, put it immediately before you start the programme.
❀	Compartment for liquid additives (fabric conditioner, starch).
MAX	Maximum level for quantity of liquid additives.
	Flap for powder or liquid detergent.

When you set a prewash programme (or option), put the detergent for prewash phase directly into the drum.

Always follow the instructions that you find on the packaging of the detergent products, but we recommend that you do not exceed the maximum indicated level (**MAX**). This quantity will however guarantee the best washing results.

After a washing cycle, if necessary, remove any detergent residue from the detergent dispenser.

LIQUID OR POWDER DETERGENT

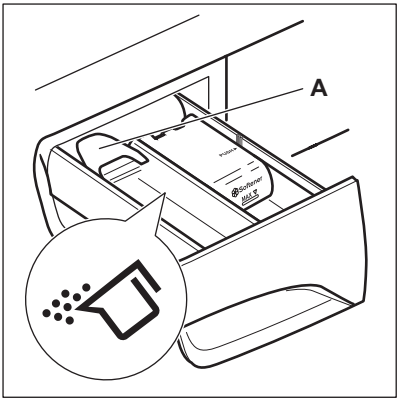

The default position of the flap is **A** (powder detergent).

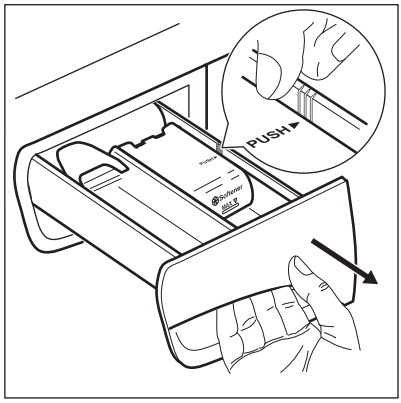

To use liquid detergent:
1. Remove the drawer. Push the drawer edge in the place with the arrow (PUSH) to remove the drawer easily.

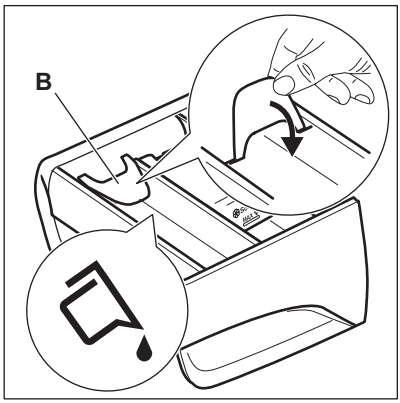

2. Adjust the flap in position **B**.
3. Put back the drawer in the recess.

When you use the liquid detergent:
- Do not use gelatinous or thick liquid detergents.
- Do not put more liquid then 120 ml.
- Do not set the programme with prewash.
- Do not set the delay start.

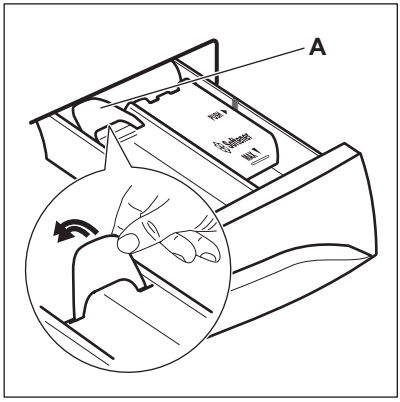

When the flap is in position **B** and you want to use powder detergent:
1. Remove the drawer.
2. Adjust the flap in position **A**.
3. Put back the drawer in the recess.

SETTING A PROGRAMME

1. Turn the programme knob and set the programme:
- The indicator ▷|| flashes.
- The display shows the level of the Time Manager, the programme duration and the indicators of the phases of the programme.

2. If necessary, change the temperature and the spin speed or add available options. When you activate an option, the indicator of the set option comes on.

If you set something incorrect, the display shows the message Err.

STARTING A PROGRAMME WITHOUT THE DELAY START

Press ▷||.
- The indicator of ▷|| stops to flash and stays on.
- The indicator [III] starts to flash on the display.
- The programme starts, the door locks, the display shows the indicator 🔒.
- The drain pump can operate for a short time when the appliance fills water.

After approximately 15 minutes from the start of the programme:
- The appliance adjusts automatically the programme duration agree with the laundry load.
- The display shows the new value.

STARTING A PROGRAMME WITH THE DELAY START

1. Press Delay Start again and again until the display shows the delay you want to set.

The related indicator comes on the display.

2. Press ▷||:
- The appliance starts the countdown.
- The door locks, the display shows the indicator 🔒.
- When the countdown is completed, the programme starts automatically.

You can cancel or change the set of the delay start before you press the ▷||. To cancel the delay start:
- Press ▷|| to set the appliance to pause.
- Press Delay Start until the display shows 0'.
- Press ▷|| again to start the programme immediately.

THE AUTOSENSE SYSTEM LOAD DETECTION

After touching the Start/Pause ▷‖ button:

1. The AutoSense System starts estimating the weight of the load to calculate the real programme duration. During this phase the display shows the simple animation.
2. After about 10-15 minutes new cycle duration is displayed.
   The appliance automatically adjusts the programme duration to the load to achieve perfect washing results in the minimum possible time.

INTERRUPTING A PROGRAMME AND CHANGING THE OPTIONS

You can change only some options before they operate.

1. Press ▷‖.

The indicator flashes.

2. Change the options.
3. Press ▷‖ again.

The programme continues.

CANCELLING A RUNNING PROGRAMME

1. Turn the programme knob to position ⏻ to cancel the programme and to deactivate the appliance.
2. Turn the programme knob again to activate the appliance. Now, you can set a new washing programme.

Before starting the new programme the appliance could drain the water. In this case, make sure that the detergent is still in the detergent compartment, if not fill the detergent again.

OPENING THE DOOR WHEN THE DELAY START OPERATES

While a delay start operates, the appliance door is locked and the indicator 🔒 is on.

1. Press ▷‖ to pause the appliance.

The indicator 🔒 starts flashing.

2. Wait about 2 minutes until the door lock indicator 🔒 stops flashing and goes off.
3. You can open the door.
4. Close the door and press the ▷‖ again.

The delay start continues to operate.

OPENING THE DOOR WHEN THE PROGRAMME OPERATES

While a programme operates, the appliance door is locked and the indicator 🔒 is on.

CAUTION! If the temperature and level of the water in the drum are too high, you cannot open the door.

1. Turn the programme knob to position ⏻ to deactivate the appliance.
2. Wait for some minutes and then open the appliance door.
3. Close the appliance door.
4. Set the programme again.

AT THE END OF THE PROGRAMME

- The appliance stops automatically.
- The acoustic signal operates (if it is activated).
- In the display 0 comes on.
- The indicator of the ▷‖ goes off.
- The door lock indicator 🔒 flashes for a few minutes, then goes off.
- You can open the door.
- Remove the laundry from the appliance. Make sure that the drum is empty.
- Close the water tap.
- Turn the programme knob to position ⏻ to deactivate the appliance.
- Keep the door ajar, to prevent the mildew and odours.

The washing programme is completed, but there is water in the drum:

- The drum turns regularly to prevent the creases in the laundry.
- The door lock indicator 🔒 is on. The indicator ▷‖ flashes. The door stays locked.
- You must drain the water to open the door.

To drain the water:

1. Press ▷‖. The appliance drains the water and spins.
2. When the programme is completed, the door lock indicator 🔒 flashes for a few minutes. When it goes off, you can open the door.
3. Turn the programme knob to position ⏻ to deactivate the appliance.

The appliance drains and spins automatically after approximately 18 hours (except for Wool programme).

STAND-BY

Some minutes after the end of the washing programme, if you do not deactivate the appliance, the energy saving status activates.

The energy saving status decreases the energy consumption when the appliance is on the stand by.

- All indicators and the display go off.
- The indicator of the ▷|| flashes slowly
- Press one of the options to deactivate the energy saving status.

If you set a programme or an option that ends with water in the drum, the energy saving status function **doesn't activate** to remind you to drain the water.

HINTS AND TIPS

WARNING! Refer to Safety chapters.

THE LAUNDRY LOAD

- Divide the laundry into: white, coloured, synthetics, delicates and wool.
- Follow the washing instructions on the laundry care labels.
- Do not wash white and coloured items together.
- Some coloured items can discolour with the first wash. We recommend that you wash them separately for the first couple of times.
- Turn multilayered fabrics, wool and items with printed illustrations inside out.
- Pre-treat stubborn stains.
- Wash stubborn stains with a special detergent.
- Be careful with curtains. Remove the hooks and put the curtains in a washing bag or pillowcase.
- A very small load can cause balance problems with the spin phase leading to excessive vibration. If this occurs:
  - **a.** interrupt the programme and open the door (refer to "Daily Use" chapter);
  - **b.** manually redistribute the load so that the items are spaced evenly around the tub;
  - **c.** press the Start/Pause button. The spin phase continues.
- Avoid washing garments full of long animal hair or poor quality garments releasing lots of fluff that could block the drain circuit and therefore requiring the Service assistance.
- Button up pillowcases, close zippers, hooks and poppers. Tie up belts, cords, shoelaces, ribbons and any other loose elements.
- Do not wash laundry without hems or with cuts. Use a washing bag to wash small and/or delicate items (e.g. underwired bras, belts, tights, shoelaces, ribbons, etc.).

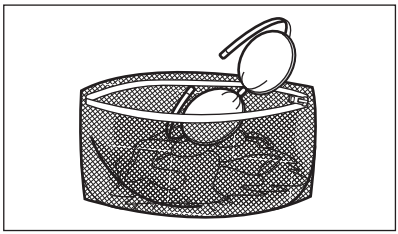

- Empty pockets and unfold the items.

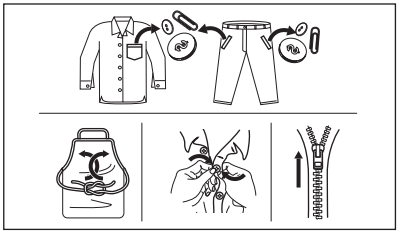

STUBBORN STAINS

For some stains, water and detergent is not sufficient.

We recommend that you pre-treat these stains before you put the items in the appliance.

Special stain removers are available. Use the special stain remover that is applicable to the type of stain and fabric.

DETERGENT TYPE AND QUANTITY

The choice of detergent and use of correct quantities not only affects your wash performance, but also helps to avoid waste and protect the environment:

- Use only detergents and other treatments specially made for washing machines. First, follow these generic rules:
  - powder detergents for all types of fabric, excluding delicate. Prefer powder detergents containing bleach for whites and laundry sanitization,

  - liquid detergents, preferably for low temperature wash programmes (60 °C max) for all types of fabric, or special ones for woollens only.
- The choice and quantity of detergent will depend on: type of fabric (delicates, woollens, cottons, etc), the colour of clothes, size of the load, degree of soiling, wash temperature and hardness of the water used.
- Follow the instructions that you find on packaging of the detergents or other treatments without exceeding the indicated maximum level (**MAX**).
- Do not mix different types of detergents.
- Use less detergent if:
  - you are washing a small load,
  - the laundry is lightly soiled,
  - there is large amounts of foam during washing.
- When using detergent tabs or pods, always put them inside the drum, not in the detergent dispenser.

Insufficient detergent may cause:
- unsatisfactory washing results,
- the wash load to turn grey,
- greasy clothes,
- mould in the appliance.

Excessive detergent may cause:
- sudsing,
- reduced washing effect,
- inadequate rinsing,
- a greater impact for the environment.

ECOLOGICAL HINTS

To save water, energy and to help protect the environment, we recommend that you follow these tips:

- **Normally soiled laundry** may be washed **without prewash** in order to save detergent, water and time (the environment is protected too!).
- Loading the appliance to the **maximum capacity indicated for each programmes helps to reduce energy and water consumption**.
- With adequate pre-treatment, stains and limited soiling can be removed; the laundry can then be washed at a lower temperature.
- To use the correct quantity of detergent, refer to the quantity suggested by the detergent producer and check the water hardness of you domestic system. Refer to 'Water hardness'.
- Set the **maximum possible spin speed** for the selected washing programme **before drying your laundry in a tumble dryer**. This will save energy during drying!

WATER HARDNESS

If the water hardness in your area is high or moderate, we recommend that you use a water softener for washing machines. In areas where the water hardness is soft it is not necessary to use a water softener.

To find out the water hardness in your area, contact your local water authority.

Use the correct quantity of water softener. Follow the instructions that you find on the packaging of the product.

CARE AND CLEANING

WARNING! Refer to Safety chapters.

The appliance is intended for normal household use only.

Read the chapter carefully for best maintenance and care.

PERIODIC CLEANING SCHEDULE

Periodic cleaning helps to extend the life of your appliance.

After each cycle, keep the door and the detergent dispenser slightly ajar to get air circulation and dry the humidity inside the appliance: this will prevent mildew and odours.

If the appliance is not used for a long time: close the water tap and unplug the appliance.

Indicative periodic cleaning schedule:

Descaling	Twice a year
Maintenance wash	Once a month
Clean door seal	Every two months
Clean drum	Every two months

Clean detergent dispenser	Every two months
Clean the inlet hose and the valve filter	Twice a year

The following paragraphs explain how you should clean each part.

REMOVING FOREIGN OBJECTS

Make sure that pockets are empty and all loose elements are tied up before running your cycle. Refer to 'The laundry load' in 'Hints and tips'.

Remove any foreign objects (such as metal clip, buttons, coins, etc) that you may find in the door seal, the inlet hose filter and the drum. Refer to 'Door seal with double lip trap', 'Cleaning the drum' and 'Cleaning the inlet hose and the valve filter' paragraphs. If necessary, please contact the Authorised Service Centre.

EXTERNAL CLEANING

Clean the appliance with mild soap and warm water only. Fully dry all the surfaces. Do not use a scouring pads or any scratching material.

CAUTION! Do not use alcohol, solvents or chemical products.

CAUTION! Do not clean the metal surfaces with chlorine-based detergent.

DESCALING

If the water hardness in your area is high or moderate, we recommend that you use a water descaling product for washing machines.

Regularly examine the drum to check for limescale. Regular detergents already contain water softening agents, but we recommend to run a cycle with an empty drum and a descaling product occasionally.

Always follow the instructions that you find on the packaging of the product.

MAINTENANCE WASH

The repeated and prolonged use of low temperature programmes can cause detergent deposits, fluff residues, bacterial growth inside the drum and the tub. This could generate bad odours and mildew. To eliminate these deposits and clean the inner part of the appliance, run a maintenance wash regularly (at least once a month).

Refer to Cleaning the drum chapter.

CLEANING THE DRUM

Regularly examine the drum to prevent unwanted deposits.

Rust deposits in the drum may occur due to rusting foreign body in the washing or tap water containing iron

Clean the drum with special products for stainless steel.

Always follow the instructions that you find on the packaging of the product. Do not clean the drum with acidic descaling products, scouring products containing chlorine or iron or steel wool.

For a thorough clean:

1. Remove all laundry from the drum.
2. Run a Cottons programme with the highest temperature.
3. Add a small quantity of powder detergent into the empty drum, in order to rinse out any left residues.

DOOR SEAL WITH DOUBLE LIP TRAP

This appliance is designed with a **self cleaning draining system**, allowing light fluff fibers that fall off the clothes to be drained out with the water. Regularly examine the seal. Coins, buttons, other small items can be recovered at the end of the cycle.

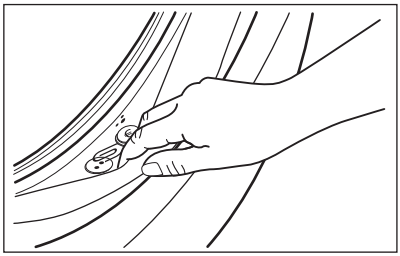

Clean it when needed, using ammonia cream cleanser agent without scratching the seal surface.

Always obey the instructions that you find on the packaging of the product.

CLEANING THE DETERGENT DISPENSER

1.

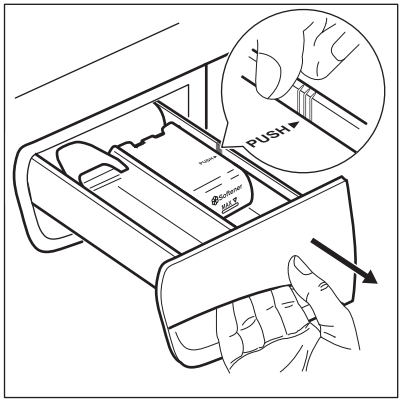

2.

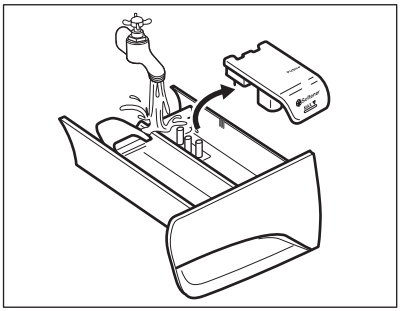

3.

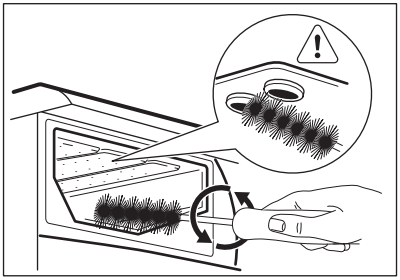

4.

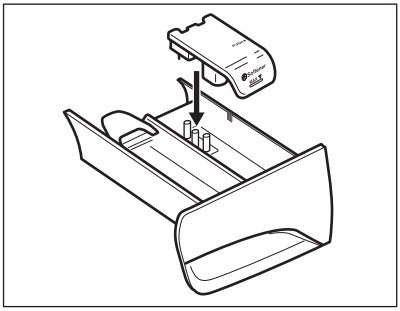

CLEANING THE INLET HOSE AND THE VALVE FILTER

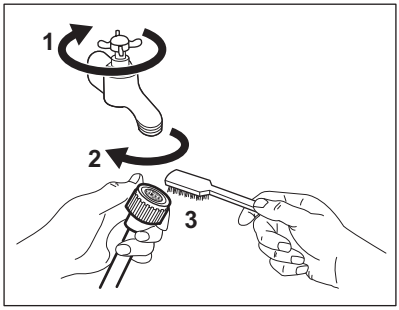

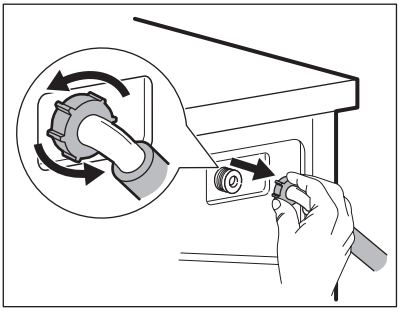

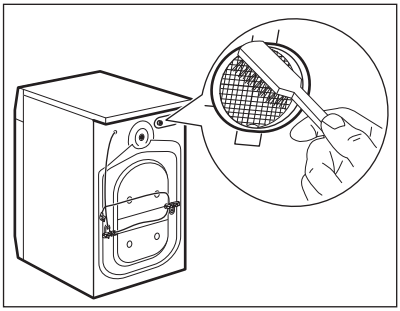

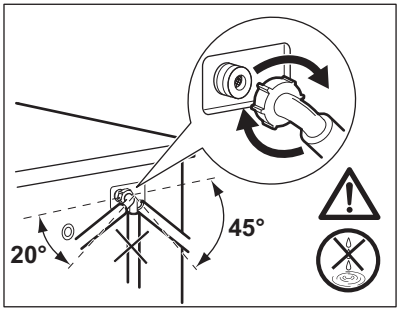

FROST PRECAUTIONS

If the appliance is installed in an area where the temperature can be less than 0° C, remove the remaining water from the inlet hose and the drain pump.

1. Disconnect the mains plug from the mains socket.
2. Close the water tap.
3. Put the two ends of the inlet hose in a container and let the water flow out of the hose.
4. Empty the drain pump. Refer to the emergency drain procedure.
5. When the drain pump is empty, install the inlet hose again.

WARNING! Make sure that the temperature is higher than 0 °C before you use the appliance again.
The manufacturer is not responsible for damages caused by low temperatures.

CONSUMPTION VALUES

INTRODUCTION

This user manual reports two different tables in order to favour a gradual passage from a regulation to the other:

- Regulation EU 1061/2010, valid up to 28th of February 2021, is related to the Energy Efficiency classes from **A+++** to **D**,
- Regulation EU 2019/2023, valid from 1st March 2021, is related to the Energy Efficiency classes from **A** to **G** set by Regulation EU 2019/2014.

See the web link **www.theenergylabel.eu** for detailed information about Energy Label.

The QR code on the energy label supplied with the appliance provides a web link to the information related to the performance of the appliance in the EU EPREL database. Keep the energy label for reference together with the user manual and all other documents provided with this appliance.
It is also possible to find the same information in EPREL using the link **https://eprel.ec.europa.eu** and the model name and product number that you find on the rating plate of the appliance. Refer to 'Product description' chapter for the position of the rating plate.

LEGEND

kg	Laundry load.	**h:mm**	Programme duration.
kWh	Energy consumption.	**°C**	Temperature in the laundry.
Litres	Water consumption.	**rpm**	Spin speed.
%	Remaining moisture at the end of spinning phase. The higher is the spin speed, the higher is the noise and the lower is the remaining moisture.		

Values and programme duration may differ depending on different conditions (e.g. room temperature, water temperature and pressure, load size and type of laundry, supply voltage) and also if you change the default setting of a programme.

ACCORDING TO COMMISSION REGULATION EU 2019/2023

Eco 40-60 programme	kg	kWh	Litres	h:mm	%	°C	rpm[1)]
Full load	8	1.150	55	3:30	52	45	1351
Half load	4	0.905	45	2:40	52	42	1351
Quarter load	2	0.410	39	2:40	54	28	1351

1) Maximum spin speed.

Power consumption in different modes

Off (W)	Stand-by (W)	Delay start (W)
0.48	0.48	4.00

Time to Off/Standby mode is 15 minutes maximum.

ACCORDING TO REGULATION 1061/2010

Standard cotton programmes.	Load (kg)	Energy consumption (kWh)	Water consumption (litres)	Approximate programme duration (minutes)	Remaining moisture (%)[1)]
For Standard 60°C cotton: Set Eco 40-60 at 60°C	8	0.96	52	244	52
For Standard 60°C cotton: Set Eco 40-60 at 60°C	4	0.73	40	210	52

Standard cotton programmes.	Load (kg)	Energy consumption (kWh)	Water consumption (litres)	Approximate programme duration (minutes)	Remaining moisture (%)[1)]
For Standard 40°C cotton: Set Eco 40-60 at 30°C	4	0.62	41	196	52

1) At the end of spin phase.

Off Mode (W)	Left On Mode (W)
0.48	0.48

The information given in the chart above is compliant with the EU Commission regulation 1015/2010 implementing directive 2009/125/EC .

COMMON PROGRAMMES

These values are indicative only.

Programme	kg	kWh	Litres	h:mm	%	°C	rpm[1)]
Cottons[2)] 90°C	8	2.60	85	3:25	52	85	1400
Cottons 60°C	8	1.70	80	3:00	52	55	1400
Cottons[3)] 20°C	8	0.48	80	3:00	52	20	1400
Synthetics 40°C	3	0.68	55	2:00	35	40	1200
Delicates[4)] 30°C	2	0.26	45	1:00	35	30	1200
Wool 30°C	1,5	0.24	60	1:05	30	30	1200

1) Reference indicator of the spin speed.
2) Suitable for washing heavily soiled textiles.
3) Suitable for washing lightly soiled cottons.
4) It also performs as quick washing cycle for lightly soiled laundry.

TROUBLESHOOTING



WARNING! Refer to Safety chapters.

ALARM CODES AND POSSIBLE FAILURES

The appliance does not start or it stops during operation. First try to find a solution to the problem (refer to the tables).



WARNING! Deactivate the appliance before carrying out any check.

With some problems, the display shows an alarm code and the Start/Pause ▷‖ **button may flash continuously:**

Problem	Possible solution
E 10 The appliance does not fill with water properly.	▪ Make sure that the water tap is open. ▪ Make sure that the pressure of the water supply is not too low. For this information, contact your local water authority. ▪ Make sure that the water tap is not clogged. ▪ Make sure that the inlet hose has no kinks, damages or bends. ▪ Make sure that the connection of the water inlet hose is correct. ▪ This problem may be also caused by the clogged drain circuit. Please contact the Authorised Service Centre. ▪ Make sure that the filter of the inlet hose and the filter of the valve are not clogged. Refer to 'Care and cleaning'.
E20 The appliance does not drain the water.	▪ Make sure that the sink spigot is not clogged. ▪ Make sure that the drain hose has no kinks or bends. ▪ This problem may be caused by the clogged drain circuit. Please contact the Authorised Service Centre. ▪ Make sure that the connection of the drain hose is correct. ▪ Set the drain programme if you set a programme without drain phase. ▪ Set the drain programme if you set an option which ends with water in the tub.
E40 The appliance door is open or not closed correctly.	▪ Make sure that the door is properly closed.
E91 Internal fail. No communication between electronic elements of the appliance.	▪ The programme was not finished properly or the appliance stopped too early. Switch the appliance off and on again. ▪ If the alarm code appears again, contact the Authorised Service Centre.
EH0 The mains supply is unstable.	▪ Wait until mains supply is stable.

If the display shows other alarm codes, deactivate and activate the appliance. If the problem continues, contact the Authorised Service Centre.
In case of different problem with the washing machine check the table below for possible solutions.

Problem	Possible solution
The programme does not start.	▪ Make sure that the mains plug is connected to the mains socket. ▪ Make sure that the appliance door is closed. ▪ Make sure that there is no damaged fuse in the fuse box. ▪ Make sure that the Start/Pause ▷II has been touched. ▪ If the delay start is set, cancel the setting or wait for the end of count-down. ▪ Deactivate the Child Lock function if it is on. ▪ Check the position of the knob on the selected programme.
The appliance fills with water and drains immediately.	▪ Make sure that the drain hose is in the correct position. The hose may be positioned too low. Refer to "Installation instruction".
The spin phase does not operate or the washing cycle lasts longer than usual.	▪ Set the spin programme. ▪ This problem may be caused by the clogged drain circuit. Please contact the Authorised Service Centre. ▪ Adjust manually the items in the tub and start the spin phase again. This problem may be caused by balance problems.
There is water on the floor.	▪ Make sure that the couplings of the water hoses are tight and there is not water leakages. ▪ Make sure that the water inlet hose and the drain hose have no damages. ▪ Make sure you use the correct detergent and the correct quantity of it.
You cannot open the appliance door.	▪ Make sure that a washing programme that ends with water in tub, has not been selected. ▪ Make sure that the washing programme is finished. ▪ Set the drain or the spin programme if there is water in the drum. ▪ Make sure that the appliance receives electrical power. ▪ This problem may be caused by a failure of the appliance. Contact the Authorised Service Centre.
The appliance makes an unusual noise and vibrates.	▪ Make sure the levelling of the appliance is correct. Refer to "Installation instruction". ▪ Make sure that the packaging and/or the transit bolts are removed. Refer to "Installation instruction". ▪ Add more laundry in the drum. The load may be too small.
The programme duration increases or decreases during programme execution.	▪ The AutoSense System is able to adjust the programme duration according to the type and the laundry load size. Refer to "The AutoSense System load detection" in "Daily Use" chapter.
The washing results are not satisfactory.	▪ Increase the detergent quantity or use a different detergent. ▪ Use special products to remove the stubborn stains before you wash the laundry. ▪ Make sure that you set the correct temperature. ▪ Decrease the laundry load.

Problem	Possible solution
Too much foam in the drum during the washing cycle.	▪ Reduce the quantity of detergent.

After the check, activate the appliance. The programme continues from the point of interruption.
If the problem occurs again, contact the Authorised Service Centre.
The necessary data for the service centre are on the rating plate.

ENVIRONMENTAL CONCERNS

Recycle materials with the symbol . Put the packaging in relevant containers to recycle it. Help protect the environment and human health by recycling waste of electrical and electronic appliances. Do not dispose of appliances marked with the symbol with the household waste. Return the product to your local recycling facility or contact your municipal office.

WWW.ZANUSSI.COM/SHOP



CE

192915260-A-322020