DPK5960B
DPK5660B
DPE5960G

EN **User Manual**
Cooker Hood

USER MANUAL

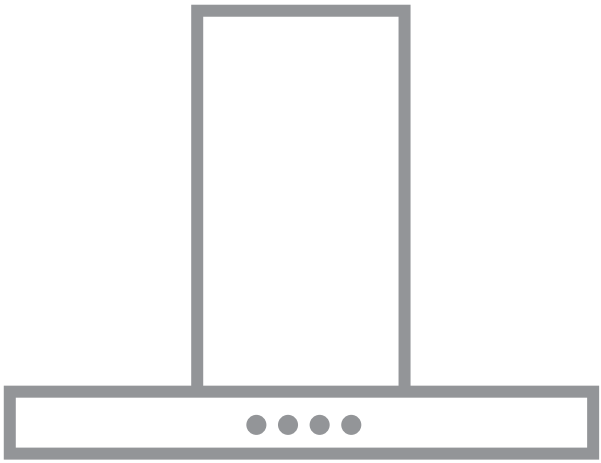

AEG

CONTENTS

1. SAFETY INFORMATION AND INSTALLATION....2
2. PRODUCT DESCRIPTION....3
3. DAILY USE....3
4. CARE AND CLEANING....5
5. ENVIRONMENTAL CONCERNS....6

FOR PERFECT RESULTS

Thank you for choosing this AEG product. We have created it to give you impeccable performance for many years, with innovative technologies that help make life simpler – features you might not find on ordinary appliances. Please spend a few minutes reading to get the very best from it.
Visit our website to:

Get usage advice, brochures, trouble shooter, service and repair information:
www.aeg.com/support

Register your product for better service:
www.registeraeg.com

Buy Accessories, Consumables and Original spare parts for your appliance:
www.aeg.com/shop

CUSTOMER CARE AND SERVICE

Always use original spare parts.
When contacting our Authorised Service Centre, ensure that you have the following data available: Model, PNC, Serial Number.
The information can be found on the rating plate.

⚠ Warning / Caution-Safety information

ⓘ General information and tips

Environmental information

Subject to change without notice.

1. SAFETY INFORMATION AND INSTALLATION

WARNING!
Refer to the separate Installation Instructions booklet for Safety Information and Installation. Read carefully the Safety chapters before any use or maintenance of the appliance.

2. PRODUCT DESCRIPTION

2.1 Control panel overview

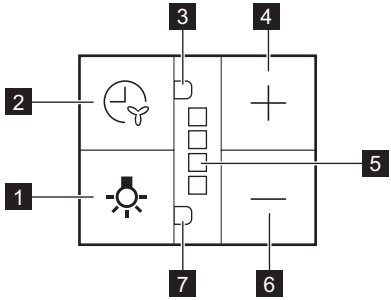

	Function	Description
1	Lamp	Turns the lights on and off.
2	Delayed switch off function button	The function sets automatic switch off delay.
3	Indicator for delayed switch off function	Indicates if function is activated.
4	Plus button	Increases the fan speed level.
5	LED indicators	indicates fan speed levels.
6	Minus button	Decreases the fan speed level.
7	Indicator for filter alarm function	Indicates if filter alarm is on.

3. DAILY USE

3.1 Using the hood

Check the recommended speed according to the table below.

1	While heating up food, cooking with covered pots.
2	While cooking with covered pots on multiple cooking zones or burners, gentle frying.
3	While boiling and frying big quantities of food without a lid, cooking on multiple cooking zones or burners.

4	While boiling and frying big quantities of food without a lid, big humidity. After 8 minutes the appliance returns to previous setting.

It is recommended to leave the hood operating for approximately 15 minutes after cooking.

To operate the hood:

1. Pull out the drawer of the hood more than 5 cm.

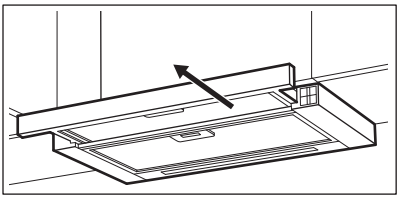

The control panel is exposed.

2. Press the + button to switch on the hood.

To increase the fan speed level press the button again. Press — to decrease the fan speed level.
The LED indicators on the panel switches on accordingly to selected fan speed level.

To turn off the fan continue to press — until the hood fan stops or close the hood drawer.

The hood remembers last setting of fan speed on closing the drawer. The hood will operate on this fan speed level when drawer is pulled out again.

3.2 Delayed switch off function

This function allows to automatically turn off the fan after specific time of operating.

1. Set the desired fan speed.
2. Press the button.

The indicator on the panel turns on. To turn off the function press the button again.

The change of the hood fan speed level or closing the hood drawer when the function is activated will result in deactivation of this function.

The time after the function switch off the fan:

Motor Speed level	Time (min)
1	20
2	15
3	10
4	8

3.3 Filter notification

Filter alarm reminds to change or clean the charcoal filter and clean the grease filter. The LED indicator blinks red regularly for 30 seconds if the grease filter must be cleaned. The LED indicator blinks red twice per every second for 30 seconds if the charcoal filter must be replaced or cleaned.

This function activates independently after 40 hours of operation for grease filter and 160 hours of operation for charcoal filter.

The fan does not operate during the alarm. Fan starts to operate on last remembered setting after 30 seconds.

Refer to cleaning the grease filter in care and cleaning chapter.

Refer to cleaning the charcoal filter or replacing the charcoal filter in care and cleaning chapter.

The function counter for charcoal filter is disabled by default.

To activate or deactivate the counter for charcoal filter:

1. Pull out the hood drawer.
2. Make sure that the fan is turned off.
3. Press for 3 seconds.

The function is activated if two white LED indicators flashes for 3 seconds. The function is deactivated if only one LED indicator flashes for 3 seconds.

To reset the function counter in the notification period:

1. Pull out the hood drawer.
2. Press for 3 seconds.

To reset the function counter out of the notification period:

1. Pull out the hood drawer.
2. Make sure that the fan is turned off.
3. For grease filter press for 3 seconds.
4. For charcoal filter press for 3 seconds.

The indicator blinks once for correct reset.

4. CARE AND CLEANING

4.1 Notes on cleaning

 **Cleaning Agents**	**Do not use abrasive detergents and brushes.** Clean the surface of the appliance with a soft cloth with warm water and a mild detergent.
	After cooking some parts of appliance can get hot. To avoid stains appliance must be cooled down and dried with clean cloth or paper towels.
	Clean stains with a mild detergent.
 **Keep the hood clean**	Clean the appliance and grease filters each month. Clean the interior and grease filters carefully from fat. Fat accumulation or other residue may cause fire.
	Grease filters can be washed in a dishwasher. The dishwasher must be set to a low temperature and a short cycle. The grease filter may discolour, it has no influence on the performance of the appliance.
 **Charcoal filter**	The time of saturation of the charcoal filter varies depending on the type of cooking and the regularity of cleaning the grease filter.

4.2 Cleaning the grease filter

Filters are mounted with the use of clips and pins on the opposite side.

To clean the filter:

1. Press the handle of the mounting clip on the filter panel underneath the hood.

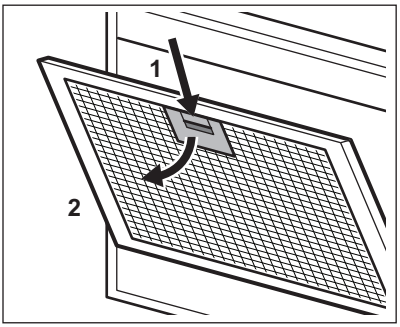

2. Slightly tilt the front of the filter downwards, then pull.

Repeat the first two steps for all filters.

3. Clean the filters using a sponge with non abrasive detergents or in a dishwasher.

The dishwasher must be set to a low temperature and a short cycle. The grease filter may discolour, it has no influence on the performance of the appliance.

4. To mount the filters back follow the first two steps in reverse order.

Repeat the steps for all filters if applicable.

4.3 Replacing the charcoal filter - optional

WARNING!
Depending on type, filter can be or cannot be regenerated. Refer to the leaflet provided with the filter.

To replace the filter:

1. Remove the grease filters from the appliance.

Refer to "Cleaning the grease filter" in this chapter.

2. Pull the tabs towards the bottom part of the filter.

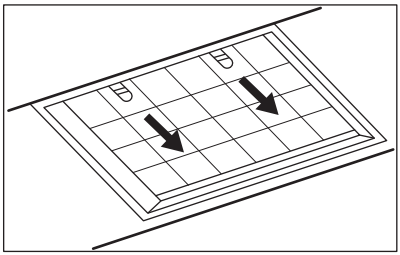

3. Slightly tilt the front of the filter downwards, then pull.
4. To install a new filter, perform the same steps in reverse order.

In any case, it is necessary to replace the filters at least every four months.

4.4 Replacing the lamp

This appliance is supplied with a LED lamp and separate control gear (LED driver). These parts can be replaced by a technician only. In case of any malfunction refer to "Service" in the "Safety Instructions" chapter.

5. ENVIRONMENTAL CONCERNS

Recycle materials with the symbol . Put the packaging in relevant containers to recycle it. Help protect the environment and human health by recycling waste of electrical and electronic appliances. Do not dispose of appliances marked with the symbol with the household waste. Return the product to your local recycling facility or contact your municipal office.

www.aeg.com/shop





867351860-A-202022

CE

AEG