AEG

aeg.com/register

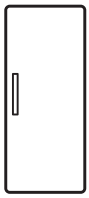

TSF5O12EF

EN User Manual | **Refrigerator**

INSTALLATION

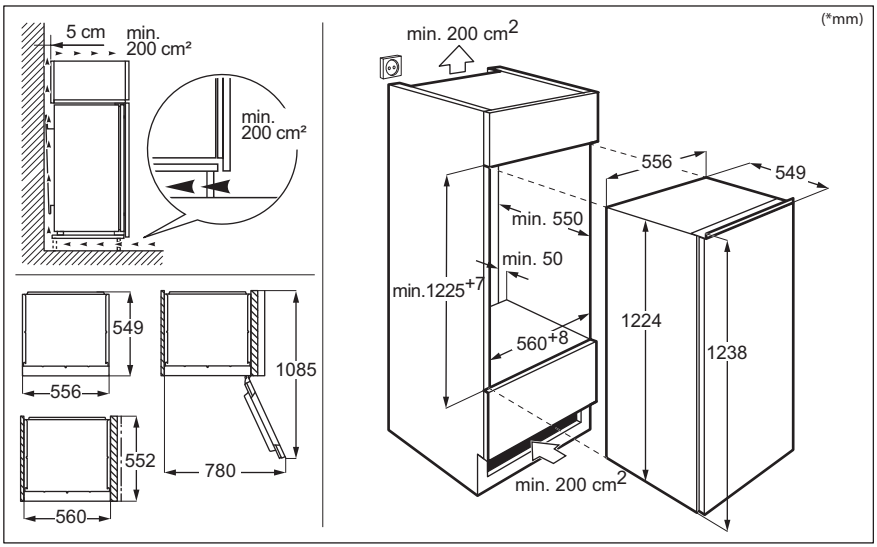

NOISES

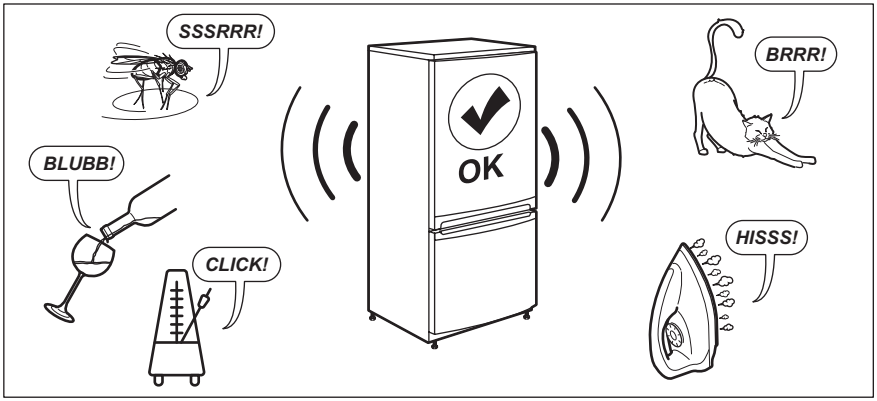

Welcome to AEG! Thank you for choosing our appliance.

Get usage advice, brochures, troubleshooting, service and repair information:
www.aeg.com/support

Subject to change without notice.

CONTENTS

1. SAFETY INFORMATION..... 3
2. SAFETY INSTRUCTIONS..... 5
3. CONTROL PANEL..... 7
4. DAILY USE..... 9
5. HINTS AND TIPS..... 10
6. CARE AND CLEANING..... 11
7. TROUBLESHOOTING..... 12
8. TECHNICAL DATA..... 15
9. INFORMATION FOR TEST INSTITUTES..... 15
10. ENVIRONMENTAL CONCERNS..... 15

1. ⚠ SAFETY INFORMATION

Before the installation and use of the appliance, carefully read the supplied instructions. The manufacturer is not responsible for any injuries or damage that are the result of incorrect installation or usage. Always keep the instructions in a safe and accessible location for future reference.

1.1 Children and vulnerable people safety

- This appliance can be used by children aged from 8 years and above and persons with reduced physical, sensory or mental capabilities or lack of experience and knowledge if they have been given supervision or instruction concerning the use of the appliance in a safe way and understand the hazards involved. Children aged from 3 to 8 years and persons with very extensive and complex disabilities are allowed to load and unload the appliance provided that they have been properly instructed. Children of less than 3 years of age should be kept away from the appliance unless continuously supervised.

- Children should be supervised to ensure that they do not play with the appliance.
- Children shall not carry out cleaning and user maintenance of the appliance without supervision.
- Keep all packaging away from children and dispose of it appropriately.

1.2 General Safety

- This appliance is for storing food and beverages only.
- This appliance is designed for single household domestic use in an indoor environment.
- This appliance may be used in, offices, hotel guest rooms, bed & breakfast guest rooms, farm guest houses and other similar accommodation where such use does not exceed (average) domestic usage levels.
- To avoid contamination of food respect the following instructions:
  - do not open the door for long periods;
  - clean regularly surfaces that can come in contact with food and accessible drainage systems;
  - store raw meat and fish in suitable containers in the refrigerator, so that it is not in contact with or drip onto other food.
- WARNING: Keep ventilation openings, in the appliance enclosure or in the built-in structure, clear of obstruction.
- WARNING: Do not use mechanical devices or other means to accelerate the defrosting process, other than those recommended by the manufacturer.
- WARNING: Do not damage the refrigerant circuit.
- WARNING: Do not use electrical appliances inside the food storage compartments of the appliance, unless they are of the type recommended by the manufacturer.
- Do not use water spray and steam to clean the appliance.
- Clean the appliance with a moist soft cloth. Only use neutral detergents. Do not use abrasive products, abrasive cleaning pads, solvents or metal objects.

- When the appliance is empty for long period, switch it off, defrost, clean, dry and leave the door open to prevent mould from developing within the appliance.
- Do not store explosive substances such as aerosol cans with a flammable propellant in this appliance.
- If the supply cord is damaged, it must be replaced by the manufacturer, its Authorised Service Centre or similarly qualified persons in order to avoid a hazard.

2. SAFETY INSTRUCTIONS

2.1 Installation

> ⚠ **WARNING!**
>
> Only a qualified person must install this appliance.

- Remove all the packaging.
- Do not install or use a damaged appliance.
- Do not use the appliance before installing it in the built-in structure due to safety manner.
- Follow the separate instructions for the appliance installation and door reversing available on our website.
- Always take care when moving the appliance as it is heavy. Always use safety gloves and enclosed footwear.
- Make sure the air can circulate around the appliance.
- At first installation or after reversing the door, wait at least 4 hours before connecting the appliance to the power supply. This is to allow the oil to flow back in the compressor.
- Before carrying out any operations on the appliance (e.g. reversing the door), remove the plug from the power socket.
- Do not install the appliance close to radiators or cookers, ovens, or hobs, unless otherwise specified in the installation instructions.
- Do not expose the appliance to the rain.
- Do not install the appliance where there is direct sunlight.
- Do not install this appliance in areas that are too humid or too cold.
- When you move the appliance, lift it by the front edge to avoid scratching the floor.
- Protect the floor from scratches when reversing the appliance door.

2.2 Electrical connection

> ⚠ **WARNING!**
>
> Risk of fire and electric shock.

> ⚠ **WARNING!**
>
> When positioning the appliance, ensure the supply cord is not trapped or damaged.

> ⚠ **WARNING!**
>
> Do not use multi-plug adapters and extension cables.

- Make sure that the parameters on the rating plate are compatible with the electrical ratings of the mains power supply.
- The appliance must be earthed.
- Always use a correctly installed shockproof socket.
- If the domestic power supply socket is not earthed, connect the appliance to a separate earth in compliance with current regulations, consulting a qualified electrician.
- Make sure not to cause damage to the electrical components (e.g. mains plug, mains cable, compressor). Contact the Authorised Service Centre or an

electrician to change the electrical components.
- The mains cable must stay below the level of the mains plug.
- Connect the mains plug to the mains socket only at the end of the installation. Make sure that there is access to the mains plug after the installation.
- Do not pull the mains cable to disconnect the appliance. Always pull the mains plug.

2.3 Use

⚠ WARNING!

Risk of injury, burns, electric shock or fire.

 The appliance contains flammable gas, isobutane (R600a), a natural gas with a high level of environmental compatibility. Be careful not to cause damage to the refrigerant circuit containing isobutane.

- Do not change the specification of this appliance.
- Any use of the built-in product as free-standing is strictly prohibited.
- This appliance is intended to be used at ambient temperature ranging from 10°C to 38°C. The specified temperature range guarantees the correct operations of the appliance.
- Do not put electrical appliances (e.g. ice cream makers) in the appliance unless they are stated applicable by the manufacturer.
- If damage occurs to the refrigerant circuit, make sure that there are no flames and sources of ignition in the room. Ventilate the room.
- Do not let hot items to touch the plastic parts of the appliance.
- Do not put soft drinks in the freezer compartment. This will create pressure on the drink container.
- Do not store flammable gas and liquid in the appliance.
- Do not put flammable products or items that are wet with flammable products in, near or on the appliance.
- Do not touch the compressor or the condenser. They are hot.
- Do not remove or touch items from the freezer compartment if your hands are wet or damp.
- Do not freeze again food that has been thawed.
- Follow the storage instructions on the packaging of frozen food.
- Wrap the food in any food contact material before putting it in the freezer compartment.
- Do not allow food to come in contact with the inner walls of the appliance compartments.

2.4 Internal lighting

⚠ WARNING!

Risk of electric shock.

- This product contains one or more light sources of energy efficiency class G.
- Concerning the lamp(s) inside this product and spare part lamps sold separately: These lamps are intended to withstand extreme physical conditions in household appliances, such as temperature, vibration, humidity, or are intended to signal information about the operational status of the appliance. They are not intended to be used in other applications and are not suitable for household room illumination.

2.5 Care and cleaning

⚠ WARNING!

Risk of injury or damage to the appliance.

- Before maintenance, deactivate the appliance and disconnect the mains plug from the mains socket.
- This appliance contains hydrocarbons in the cooling unit. Only a qualified person must do the maintenance and the recharging of the unit.
- Regularly examine the drain of the appliance and if necessary, clean it. If the drain is blocked, defrosted water collects in the bottom of the appliance.

2.6 Service

- To repair the appliance contact the Authorised Service Centre. Use only original spare parts.
- Please note that self-repair or non-professional repair can have safety consequences and might void the guarantee.
- The following spare parts are available for at least 7 years after the model has been discontinued: thermostats, temperature sensors, printed circuit boards, light sources, door handles, door hinges, trays and baskets. Door gaskets are available for at least 10 years after the model has been discontinued. The duration may be longer in your country. For further information, please visit our website.
- Please note that some of these spare parts are only available to professional repairers, and that not all spare parts are relevant for all models.

2.7 Disposal

⚠ WARNING!

Risk of injury or suffocation.

- Disconnect the appliance from the mains supply.
- Cut off the mains cable and discard it.
- Remove the door to prevent children and pets to be closed inside of the appliance.
- The refrigerant circuit and the insulation materials of this appliance are ozone-friendly.
- The insulation foam contains flammable gas. Contact your municipal authority for information on how to discard the appliance correctly.
- Do not cause damage to the part of the cooling unit that is near the heat exchanger.

3. CONTROL PANEL

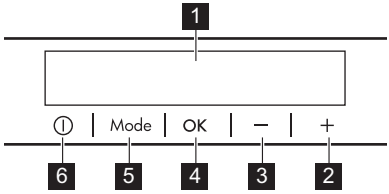

1 Display
2 Temperature warmer button
3 Temperature colder button
4 OK
5 Mode
6 ON/OFF

It is possible to change predefined sound of buttons by pressing together Mode and temperature colder button for a few seconds. Change is reversible.

3.1 Display

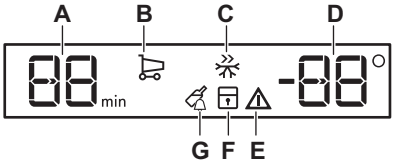

A. Timer indicator
B. Coolmatic function
C. Frostmatic function
D. Temperature indicator
E. Alarm indicator
F. ChildLock function
G. DrinksChill function

3.2 Switching on/off

Switching on

1. Connect the mains plug to the power socket.

2. Press ON/OFF if the display is off. The temperature indicators show the set default temperature.

If "dEMo" appears on the display, refer to "Troubleshooting" .

Switching off

1. Press ON/OFF for 3 sec.

The display switches off.

2. Disconnect the mains plug from the power socket.

3.3 Temperature regulation

Press the temperature regulators to set the temperature of the appliance.

The temperature range may vary between 2°C and 8°C for fridge (recommended 4°C).

The temperature indicators show the set temperature.

ⓘ

The set temperature will be reached within 24 h.

After a power failure the set temperature remains stored.

3.4 Coolmatic function

Coolmatic function allows to chill large amount of warm food rapidly to avoid warming food already stored in the fridge.

1. Press the Mode until the corresponding icon appears.

The Coolmatic indicator flashes.

2. Press the OK to confirm.

The Coolmatic indicator appears.
This function stops automatically after approx. 6 hour.

To deactivate the function before it automatically ends, repeat the procedure or select a different fridge set temperature.

3.5 Frostmatic function

The Frostmatic function is used to pre-freeze and fast freeze in sequence in the freezer compartment. This function accelerates the freezing of fresh food and protects foodstuffs already stored from warming.

ⓘ

To freeze fresh food activate the function at least 24 h before placing the food to complete pre-freezing.

1. Press Mode button until the Frostmatic indicator blinks to activate this function.
2. Press the OK button to confirm.

The Frostmatic indicator lights up.
This function stops automatically after 52 h.

Repeat the procedure or select different temperature to deactivate the function.

3.6 ChildLock function

Activate the ChildLock function to lock the buttons from unintentional operation.

1. Press Mode until the corresponding icon appears.

The ChildLock indicator flashes.

2. Press OK to confirm.

The ChildLock indicator is shown.
To deactivate the ChildLock function, repeat the procedure until the ChildLock indicator turns off.

3.7 DrinksChill function

The DrinksChill function sets an acoustic alarm at the preferred time.

1. Press Mode until the DrinksChill indicator blinks.

The Timer shows the set value (30 min) for a few seconds.

2. Press the Timer regulator to change the set value from 1 to 90 min.
3. Press OK to confirm.

The DrinksChill indicator lights up.
The Timer starts to blink (min).
At the end of the countdown the "0 min" indicator blinks and the alarm sounds. Press OK to switch off the sound and deactivate the function.

Repeat the procedure to switch off the function.

ⓘ

You can change the time during or at the end of the countdown. Press the temperature colder or the temperature warmer button.

3.8 Door open alarm

If the fridge door is left open for approx. 5 min, the sound is on and alarm indicator blinks.

The alarm stops after closing the door. Press any button to switch off the sound.

ⓘ

If you do not press any button, the sound switches off after 1 hour.

4. DAILY USE

4.1 Positioning the door shelves

For easier storage of food, the door shelves can be placed at different heights. Pull the shelf up to reposition.

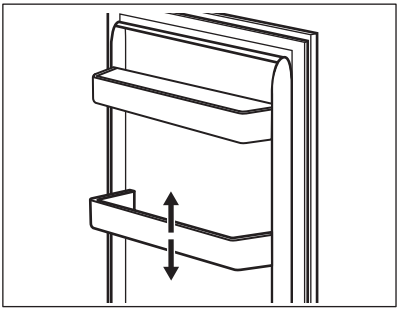

4.2 Movable shelves

The walls of the fridge are equipped with runners. You can change the position of the shelves.

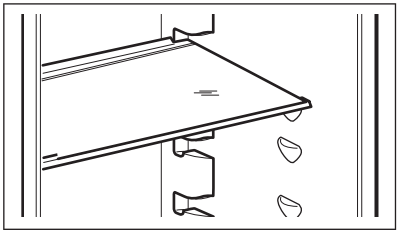

ⓘ

Do not move the glass shelf above the vegetable drawer to ensure correct air circulation.

4.3 Vegetable drawer

There is a special drawer in the bottom part of the appliance suitable for storage of fruits and vegetables.

4.4 Freezing fresh food

Use the freezer compartment for freezing fresh food and storing frozen and deep-frozen food for a long time.

Activate the Frostmatic function at least 24 h before placing the food to be frozen in the freezer compartment.

Store the fresh food evenly distributed in all compartments or drawers.

Do not exceed the max. amount of food that can be frozen without adding other fresh food within 24 h (refer to the rating plate).

When the freezing process is complete, the appliance automatically returns to the previous temperature setting (see "Frostmatic function").

For more information refer to "Hints for freezing".

4.5 Storage of frozen food

When activating the appliance for the first time or after a period out of use, activate the

Frostmatic function at least 3 h before putting the products in the freezing compartment.

⚠ CAUTION!

If the power has been off for longer than the value shown on rating plate under "rising time", the defrosted food must be consumed immediately.

5. HINTS AND TIPS

5.1 Hints for energy saving

- Fridge: The configuration with the drawers in the bottom part of the appliance and shelves evenly distributed ensures the most efficient use of energy. Position of the door bins does not affect energy consumption.
- Do not open the door frequently or leave it open longer than necessary.
- Freezer: The colder the temperature setting, the higher the energy consumption.
- Fridge: Do not set too high temperature unless it is required by the characteristics of the food.
- If the ambient temperature is high and the temperature control is set to low temperature and the appliance is fully loaded, the compressor may run continuously, causing frost or ice formation on the evaporator. In this case, set the temperature control toward higher temperature to allow automatic defrosting.
- Do not cover the ventilation grilles or holes.

5.2 Hints for freezing

- Do not freeze bottles or cans with liquids, in particular drinks containing carbon dioxide. They may explode during freezing.
- Do not put hot food in the freezer compartment.
- Do not place fresh unfrozen food directly next to already frozen food.
- Do not eat ice cubes, water ices or ice lollies immediately after taking them out of the freezer to avoid frostbites.
- Do not re-freeze defrosted food.

5.3 Hints for storage of frozen food

- Freezer compartment is marked with ✳✳✳.
- Good temperature setting that ensures preservation of frozen food products is a temperature less than or equal to -18°C.
- Higher temperature setting inside the appliance may lead to shorter shelf life.
- The whole freezer compartment is suitable for storage of frozen food products.
- Leave enough space around the food to allow air to circulate freely.

5.4 Shelf life for freezer compartment

Type of food	Shelf life (months)
Bread	3
Fruits (except citrus)	6 - 12
Vegetables	8 - 10
Leftovers without meat	1 - 2
Dairy food:	
Butter	6 - 9
Soft cheese (e.g. mozzarella)	3 - 4
Hard cheese (e.g. parmesan, cheddar)	6
Seafood:	
Fatty fish (e.g. salmon, mackerel)	2 - 3
Lean fish (e.g. cod, flounder)	4 - 6
Shrimps	12
Shucked clams and mussels	3 - 4
Cooked fish	1 - 2
Meat:	

Type of food	Shelf life (months)
Poultry	9 - 12
Beef	6 - 12
Pork	4 - 6
Lamb	6 - 9
Sausage	1 - 2
Ham	1 - 2
Leftovers with meat	2 - 3

5.5 Hints for food refrigeration

- Fresh food compartment is marked (on the rating plate) with .
- Good temperature setting that ensures preservation of fresh food is a temperature less than or equal to +4°C.
- Always use closed containers for liquids and for food, to avoid flavours or odours in the compartment.
- To avoid the cross-contamination between cooked and raw food, cover the cooked food and separate it from the raw one.
- Wrap and place meat on the glass shelf above the vegetable drawer.
- Defrost the food inside the fridge.
- Do not insert hot food inside the appliance.
- Clean fruit and vegetables and place in a dedicated drawer (vegetable drawer).
- Do not keep exotic fruits in the fridge.
- Do not keep vegetables like tomatoes, potatoes, onions, and garlic in the fridge.
- Close the bottles before you put them into the fridge.

6. CARE AND CLEANING

⚠ WARNING!

Refer to Safety chapters.

6.1 Cleaning the interior

Before first use clean the interior and all accessories with lukewarm water and neutral soap, then dry.

⚠ CAUTION!

The accessories and parts of the appliance are not suitable for washing in a dishwasher.

6.2 Periodic cleaning

Clean the equipment regularly:

- Clean the inside and accessories with lukewarm water and neutral soap. Rinse and wipe them dry.
- Wipe down the door seals regularly.

6.3 Defrosting of the fridge

Frost is automatically eliminated from the evaporator of the fridge compartment during normal use. The defrost water drains out through a trough into a special container where it evaporates.

Regularly clean the defrost water drain hole in the middle of the fridge compartment channel.

Use the tube cleaner provided with the appliance.

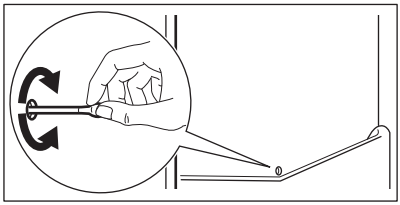

6.4 Defrosting of the freezer

⚠ CAUTION!

Never use sharp metal tools to scrape off frost from the evaporator.
Use only accessories recommended by the manufacturer to speed up thawing.

ⓘ

Set a lower temperature about 12 h prior to defrosting.

It is normal for a thin layer of frost to form on the freezer shelves and around the top compartment. Defrost the freezer when the frost layer reaches a thickness of about 3-5 mm.

1. Switch off and unplug the appliance.
2. Remove stored food.
3. Leave the door open and protect the floor from the water.
4. Put a pot of warm water in the freezer compartment in order to speed up the defrosting.
5. Dry the interior after defrosting.
6. Switch on the appliance. Close the door.
7. Set the lowest temperature for at least 3 hbefore you put the food back into the freezer compartment.

6.5 Period of non-operation

When the appliance is not in use for long period, take the following precautions:

1. Disconnect the appliance from electricity supply.
2. Remove all food.
3. Defrost the appliance.
4. Clean the appliance and all accessories.
5. Leave the doors open to prevent unpleasant smells.

7. TROUBLESHOOTING

⚠ **WARNING!**

Refer to Safety chapters.

7.1 What to do if...

Problem	Possible cause	Solution
The appliance does not operate.	The appliance is switched off.	Switch on the appliance.
	The mains plug is not connected to the mains socket correctly.	Connect the mains plug to the mains socket correctly.
	There is no voltage in the mains socket.	Connect a different electrical appliance to the mains socket. Contact a qualified electrician.
The appliance is noisy.	The appliance is not supported properly.	Check if the appliance stands stable.
Acoustic or visual alarm is on.	The door is left open.	Close the door.
The compressor operates continually.	Temperature is set incorrectly.	Refer to "Control panel" chapter.
	Too much food is put in at the same time.	Wait a few hours and then check the temperature again.
	The room temperature is too high.	Refer to "Installation" chapter.
	Food placed in the appliance is too warm.	Allow food to cool to room temperature before storing.
	The door is not closed correctly.	Refer to "Closing the door" section.
	The Frostmatic function is switched on.	Refer to "Frostmatic function" section.

Problem	Possible cause	Solution
	The Coolmatic function is switched on.	Refer to "Coolmatic function" section.
The compressor does not start immediately after pressing the "Frostmatic" or "Coolmatic", or after changing the temperature.	The compressor starts after a period of time.	This is normal, no error has occurred.
Door is misaligned or interferes with ventilation grill.	The appliance is not levelled.	Refer to installation instructions.
Door does not open easily.	You attempted to re-open the door immediately after closing.	Wait a few seconds between closing and re-opening of the door.
The lamp does not work.	The lamp is in stand-by mode.	Close and open the door.
	The lamp is defective.	Contact the Authorized Service Centre.
There is too much frost and ice.	The door is not closed correctly.	Refer to "Closing the door" section.
	The gasket is deformed or dirty.	Refer to "Closing the door" section.
	Food is not wrapped properly.	Wrap the food properly.
	Temperature is set incorrectly.	Refer to "Control panel" chapter.
	Appliance is fully loaded and is set to the lowest temperature.	Set a higher temperature. Refer to "Control panel" chapter.
	Temperature set in the appliance is too low and the ambient temperature is too high.	Set a higher temperature. Refer to "Control panel" chapter.
Water flows on the rear plate of the refrigerator.	During the automatic defrosting process, frost melts on the rear plate.	This is correct.
There is too much condensed water inside the fridge.	Door was opened too frequently.	Open the door only when necessary.
	Door was not closed completely.	Make sure the door is closed completely.
	Stored food was not wrapped.	Wrap food in suitable packaging before storing it in the appliance.
	This is normal that during summer and autumn more condensation can form due to the increased air and food humidity. Fridge does not produce any moisture. After this period, the humidity in the fridge decreases itself.	In summer and autumn, set the warmer temperature in the refrigerator (approx. 6-7°C).
There are water drops on the glass shelves.	There is too much moisture inside the fridge.	Wipe the glass shelves with a cloth to remove water drops.
Water flows inside the fridge.	Food prevents the water from flowing into the water collector.	Make sure that food does not touch the rear plate.
	The water outlet is clogged.	Clean the water outlet.

Problem	Possible cause	Solution
Water flows on the floor.	The melting water outlet is not connected to the evaporative tray above the compressor.	Attach the melting water outlet to the evaporative tray.
Temperature cannot be set.	The Frostmatic function or Coolmatic function is switched on.	Switch off Frostmatic function or Coolmatic function manually, or wait until it deactivates automatically. Refer to "Frostmatic function" or "Coolmatic function" section.
The temperature in the appliance is too low/too high.	The temperature is not set correctly.	Set a higher/lower temperature.
	The door is not closed correctly.	Refer to the "Closing the door" section.
	The food is too hot.	Let the food cool down before storage.
	Too much food is stored at the same time.	Store less food at the same time.
	The thickness of the frost is greater than 4-5 mm.	Defrost the appliance.
	The door has been opened often.	Open the door only if necessary.
	The Frostmatic function is switched on.	Refer to the "Frostmatic function" section.
	The Coolmatic function is switched on.	Refer to the "Coolmatic function" section.
	There is no cold air circulation in the appliance.	Ensure cold air circulation in the appliance. Refer to the "Hints and tips" chapter.
DEMO appears on the display.	The appliance is in the demo mode.	Press and hold the OK button for approx. 10 sec until you hear a long sound and the display turns off for a short time.
 or  or  appears instead of numbers on the temperature display.	Temperature sensor problem.	Contact the Authorised Service Centre. The cooling system will continue to keep food cold, but temperature adjustment will not be possible.

If the problem persists, contact the Authorised Service Centre.

7.2 Replacing the lamp

For replacing the lamp, contact the Authorized Service Centre.

7.3 Closing the door

1. Clean the door gaskets.
2. To adjust the door, refer to installation instructions.
3. To replace the defective door gaskets, contact the Authorized Service Centre.

8. TECHNICAL DATA

The technical information is situated in the rating plate on the internal side of the appliance and on the energy label.

The QR code on the energy label supplied with the appliance provides a web link to the information related to the performance of the appliance in the EU EPREL database. Keep the energy label for reference together with the user manual and all other documents provided with this appliance.

It is also possible to find the same information in EPREL using the link *https://eprel.ec.europa.eu* and the model name and product number that you find on the rating plate of the appliance.

See the link *www.theenergylabel.eu* for detailed information about the energy label.

9. INFORMATION FOR TEST INSTITUTES

Installation and preparation of the appliance for any EcoDesign verification shall be compliant with EN 62552 (EU). Ventilation requirements, recess dimensions and minimum rear clearances shall be as stated in this User Manual in "Installation". Please contact the manufacturer for any other further information, including loading plans.

10. ENVIRONMENTAL CONCERNS

Recycle materials with the symbol . Put the packaging in relevant containers to recycle it. Help protect the environment and human health by recycling waste of electrical and electronic appliances. Do not dispose of appliances marked with the symbol  with the household waste. Return the product to your local recycling facility or contact your municipal office.

aeg.com

211629401-B-492024

