AEG

aeg.com/register

**LWR7116O4B**

**EN** User Manual | **Washer Dryer**

**Welcome to AEG! Thank you for choosing our appliance.**

Get usage advice, brochures, troubleshooting, service and repair information:
**www.aeg.com/support**

Subject to change without notice.

## CONTENTS


**1.** SAFETY INFORMATION..... 2
**2.** SAFETY INSTRUCTIONS..... 5
**3.** PRODUCT DESCRIPTION..... 8
**4.** TECHNICAL DATA..... 9
**5.** INSTALLATION..... 9
**6.** CONTROL PANEL..... 14
**7.** DIAL AND BUTTONS..... 16
**8.** PROGRAMMES..... 19
**9.** BEFORE FIRST USE..... 26
**10.** SETTINGS..... 26
**11.** DAILY USE..... 27
**12.** DAILY USE - WASHING & DRYING..... 31
**13.** DAILY USE - DRYING ONLY..... 32
**14.** FLUFF IN THE FABRICS..... 33
**15.** HINTS AND TIPS..... 34
**16.** CARE AND CLEANING..... 36
**17.** TROUBLESHOOTING..... 42
**18.** CONSUMPTION VALUES..... 45
**19.** ENVIRONMENTAL CONCERNS..... 48


# 1. ⚠ SAFETY INFORMATION

Before beginning the installation and use of this appliance, carefully read the supplied instructions.
The manufacturer is not responsible for any injuries or damage that are the result of incorrect installation or usage.
Always keep the instructions in a safe and accessible location for future reference.

## 1.1 Children and vulnerable people safety

⚠ **WARNING!**

Risk of suffocation, injury or permanent disability.

- This appliance can be used by children aged from 8 years and above and persons with reduced physical, sensory or mental capabilities or lack of experience and knowledge if they have been given supervision or instruction concerning the use of the appliance in a safe way and understand the hazards involved.
- Children between 3 and 8 years of age and persons with very extensive and complex disabilities shall be kept away from the appliance unless continuously supervised.
- This appliance is not intended for use by persons (including children) with reduced physical, sensory or mental capabilities, or lack of experience and knowledge, unless they have been given supervision or instruction concerning use of the appliance by a person responsible for their safety.
- Children should be supervised to ensure that they do not play with the appliance.
- Keep all packaging away from children and dispose of it appropriately.
- Keep detergents away from children.
- Keep children and pets away from the appliance when the door is open.
- If the appliance has a child safety device, it should be activated.
- Children shall not carry out cleaning and user maintenance of the appliance without supervision.

## 1.2 General Safety

- This appliance is for washing and drying domestic-type machine-washable and dryable laundry only.
- Do not use the dryer function if laundry has been soiled with industrial chemicals.
- This appliance is designed for single household domestic use in an indoor environment.
- This appliance may be used in offices, hotel guest rooms, bed & breakfast guest rooms, farm guest houses and other

similar accommodation where such use does not exceed (average) domestic usage levels.

- Do not change the specification of this appliance.
- The appliance shall be installed as a freestanding product or below the kitchen worktop if space margins permit.
- Do not install the appliance behind a lockable door, a sliding door or a door with a hinge on the opposite side, that would prevent the appliance door from being fully open.
- Connect the mains plug to the mains socket only at the end of the installation process. Make sure that the mains plug is accessible after installation.
- The ventilation opening in the base must not be covered by a carpet, mat, or any floor covering.
- WARNING: The appliance must not be supplied through an external switching device, such as a timer, or connected to a circuit that is regularly switched on and off by a utility.
- Ensure good air ventilation in the room where the appliance is installed to avoid the backflow of unwanted gases into the room from appliances burning gas or other fuels, including open fires.
- Exhaust air must not be discharged into a flue which is used for exhausting fumes from any appliances burning gas or other fuels.
- The operating water pressure at the water entry point from the outlet connection must be between 0.5 bar (0.05 MPa) and 10 bar (1.0 MPa).
- The appliance maximum load is 10.0 kg. Do not exceed the maximum load of each programme (refer to the "Programmes" chapter).
- The appliance must be connected to the water mains using the new supplied hose sets, or other new hose sets supplied by the Authorised Service Centre.
- Old hose sets must not be reused.
- If the mains power supply cable is damaged, it must be replaced by the manufacturer, its Authorised Service Centre or similarly qualified persons to avoid an electrical hazard.

- Wipe away lint or packaging debris that has accumulated around the appliance.
- Items that have been soiled with substances such as vegetable or mineral oil, acetone, alcohol, petrol, kerosene, spot removers, turpentine, waxes and wax removers should be washed separately with an extra amount of detergent before being dried in the washer dryer.
- Do not use the appliance if items have been soiled with industrial chemicals.
- Do not dry unwashed items in the wash dryer.
- Items such as foam rubber (latex foam), shower caps, waterproof textiles, and rubber backed articles and clothes, or pillows fitted with foam rubber pads should not be dried in the washer dryer.
- Fabric softeners, or similar products, should only be used as specified by the product manufacturer's instructions.
- Remove all objects from items that could be a source of fire ignition such as lighters or matches.
- WARNING: Never stop the washer dryer before the end of the drying cycle unless all items are quickly removed and separated so that residual heat can dissipate.
- The final part of the washer dryer cycle takes place without heat (cool down cycle) to ensure that items reach a temperature that will not cause damage to them.
- Do not use high pressure water sprays and/or steam to clean the appliance.
- Clean the appliance with a moist cloth. Use only neutral detergents. Do not use abrasive products, abrasive cleaning pads, solvents or metal objects.
- Before any maintenance operation, deactivate the appliance and disconnect the mains plug from the socket.

## **2.** SAFETY INSTRUCTIONS

## 2.1 Installation

ⓘ

The installation must comply with relevant national regulations.

- Follow the installation instructions supplied with the appliance.
- Do not install or use the appliance where the temperature can be less than 0°C or where it is exposed to the weather.
- Always keep the appliance vertical when it is being moved.
- Make sure that there is air circulation between the appliance and the floor.
- Remove all the packaging and the transit bolts.
- The floor area on which the appliance is to be installed must be flat, stable, heat resistant and clean.
- Keep the transit bolts in a safe place. If the appliance is to be moved in the future they must be reattached to lock the drum to prevent an internal damage.
- Always take care when moving the appliance as it is heavy. Always use safety gloves and enclosed footwear.
- Do not install or use a damaged appliance.
- Do not install the appliance where the appliance door cannot be fully opened.
- Adjust the feet to have the necessary space between the appliance and the flooring.
- When the appliance is in its permanent position, check if it is levelled correctly with the aid of a spirit level. If it is not, adjust the feet accordingly.

## 2.2 Electrical Connection

⚠ **WARNING!**

Risk of fire and electric shock.

- WARNING: This appliance is designed to be installed / connected to a grounding connection in the building.
- Always use a correctly installed shockproof socket.
- Do not use multi-plug adapters and extension cables.
- Do not pull the mains cable to disconnect the appliance. Always pull the mains plug.
- Do not touch the mains cable or the mains plug with wet hands.
- This appliance is fitted with a 13 A mains plug. If it is necessary to change the mains plug fuse, use only a 13 A ASTA (BS 1362) fuse (UK and Ireland only).

## 2.3 Water Connection

- The inlet water shall not exceed 25 °C.
- Do not cause damage to the water hoses.
- Before connection to new pipes, pipes not used for a long time, where repair work has been carried out or new devices fitted (water meters, etc.), let the water flow until it is clean and clear.
- Ensure that there are no visible water leaks during and after the first use of the appliance.
- Do not use an extension hose if the inlet hose is too short. Contact the Authorised Service Centre for the replacement of the inlet hose.
- When unpacking the appliance, It is possible to see water flowing from the drain hose. This is due to the testing of the appliance with the use of water in the factory.
- You can extend the drain hose to maximum 400 cm. Contact the Authorised Service Centre for the other drain hose and the extension.
- Make sure that there is access to the tap after the installation.

## 2.4 Use

⚠ **WARNING!**

Risk of injury, electric shock, fire, burns or damage to the appliance.

- Do not put flammable products or items that are wet with flammable products in, near or on the appliance.
- Do not touch the glass door while a programme operates. The glass can get hot.
- Do not dry damaged (torn, frayed) items that contain padding or fillings.
- If laundry has been washed with a stain remover, carry out an additional rinse cycle before starting a drying cycle.
- Make sure that all metal objects are removed from the laundry.

- Dry only fabrics that are suitable to dry in the appliance. Follow the cleaning instruction on the item label.
- Do not sit or stand on the open door of the appliance.
- Do not dry dripping wet clothes in the appliance.
- Do not let hot items to touch the plastic parts of the appliance.
- Remove a detergent ball (if used) before starting a drying programme.
- Do not use a detergent ball if setting a non-stop programme.

## 2.5 Service

- To repair the appliance contact the Authorised Service Centre. Use original spare parts only.
- Please note that self-repair or non-professional repair can have safety consequences and might void the guarantee.
- The following spare parts are available for at least 10 years after the model has been discontinued: motor and motor brushes, transmission between motor and drum, pumps, shock absorbers and springs, washing drum, drum spider and related ball bearings, heaters and heating elements, including heat pumps, piping and related equipment including hoses, valves, filters and aquastops, printed circuit boards, electronic displays, pressure switches, thermostats and sensors, software and firmware including reset software, door, door hinge and seals, other seals, door locking assembly, plastic peripherals such as detergent dispensers. The duration may be longer in your country. For further information, please visit our website.
- Please note that some of these spare parts are only available to professional repairers, and that not all spare parts are relevant for all models.
- Concerning the lamp(s) inside this product and spare part lamps sold separately: These lamps are intended to withstand extreme physical conditions in household appliances, such as temperature, vibration, humidity, or are intended to signal information about the operational status of the appliance. They are not intended to be used in other applications and are not suitable for household room illumination.

## 2.6 Disposal

- Disconnect the appliance from the mains electrical and water supplies.
- Cut off the mains electrical cable close to the appliance and dispose of it.
- Remove the door catch to prevent children or pets from becoming trapped in the drum.
- Dispose of the appliance in accordance with local requirements for the disposal of Waste Electrical and Electronic Equipment (WEEE).

# 3. PRODUCT DESCRIPTION

## 3.1 Appliance overview

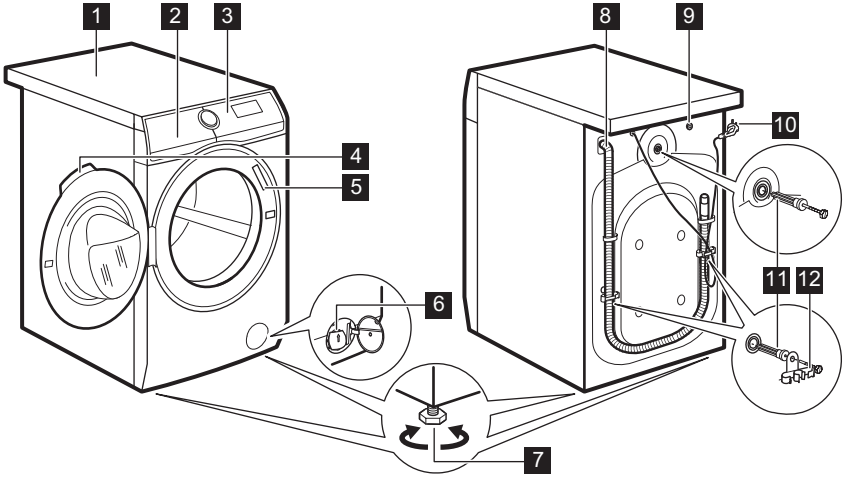


1 Worktop
2 Detergent dispenser
3 Control panel
4 Door handle
5 Rating plate
6 Drain pump filter
7 Feet for levelling the appliance
8 Drain hose
9 Inlet hose connection
10 Mains cable
11 Transit bolts
12 Hose support

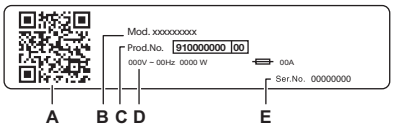


**The rating plate reports:**

A. QR code
B. Model name
C. Product number
D. Electrical ratings
E. Serial number

Scan the **QR code** on the appliance to register your product and get the most out of it.

- Access your appliance details, documentation and articles on how to use the best features (User Manual also available at **aeg.com/manuals** )
- Get usage advice, troubleshooting, service and repair information (also available at **aeg.com/support** )
- Buy accessories, Consumable and Original Spare parts for your appliance (also available at **aeg.com/shop** )

# 4. TECHNICAL DATA

| | | |
|---|---|---|
| Dimension | Width/ Height/ Total depth | 59.7 cm /84.7 cm /66.0 cm |
| Electrical connection | Voltage<br>Overall power<br>Fuse<br>Frequency | 230 V<br>2100 W<br>13 A<br>50 Hz |
| Level of protection against ingress of solid particles and moisture ensured by the protective cover, except where the low voltage equipment has no protection against moisture | | IPX4 |
| Water supply **1)** | | Cold water |
| Water supply pressure **2)** | Minimum<br>Maximum | 0.5 bar (0.05 MPa)<br>10 bar (1.0 MPa) |
| Maximum wash load | Cotton | 10.0 kg |
| Maximum dry load | Cotton<br>Synthetics | 6.0 kg<br>4.0 kg |

**1)** Connect the water inlet hose to a water tap with a 3/4" thread.

**2)** The appliance works correctly if the water pressure is not lower than 0.05 MPa (0.5 bar). If you cannot connect the water inlet hose to the cold water tap of the primary hydraulic system, connect it to your domestic cold water storage system. Make sure not to exceed a distance of 5.02 m (16.5 ft) between the appliance inlet hose and the bottom of the water storage tank.

# 5. INSTALLATION

⚠ **WARNING!**

Refer to Safety chapters.

## 5.1 Unpacking

⚠ **WARNING!**

Remove all the packaging and the transit bolts before installing the appliance.

⚠ **WARNING!**

Use the gloves.

1. Remove the external film. If necessary, use a cutter.

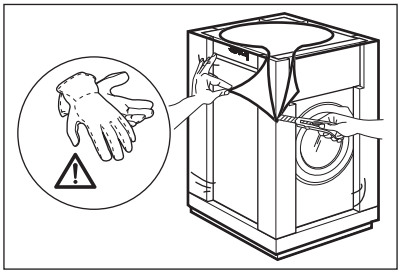

2. Remove the cardboard top and the other packaging materials.

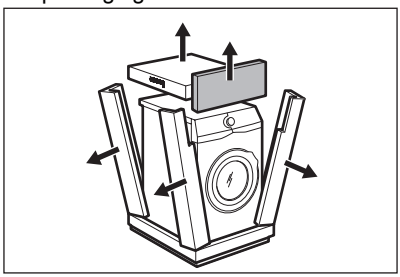

3. Remove the internal film.

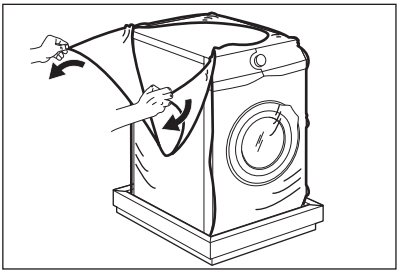

4. Open the door, remove the piece from the door seal and all the items from the drum.

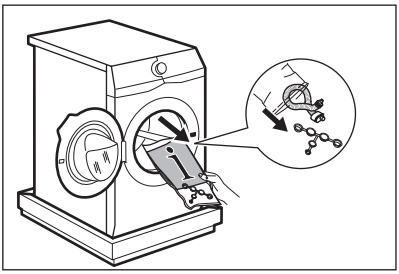

5. Carefully put the appliance down on its rear side.
6. Put the front packaging element on the floor under the appliance.

ⓘ

Make sure not to damage the hoses.

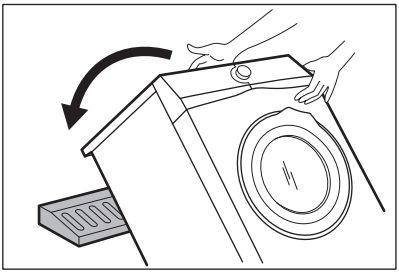

7. Remove the protection from the bottom.

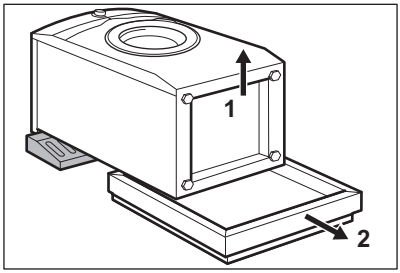


8. Pull up the appliance in vertical position.

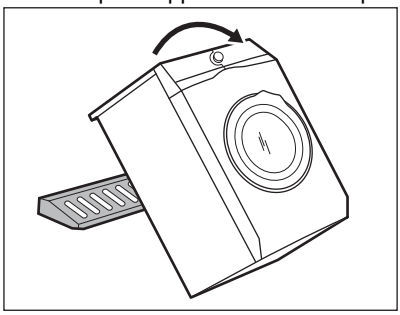

9. Remove the power supply cable and the drain hose from the hose holders.

ⓘ

It is possible to see water flowing from the drain hose. This is due to the testing with water of the appliance in factory.

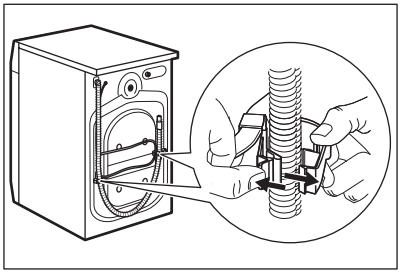

10. Remove the three bolts by using the spanner supplied with the appliance.

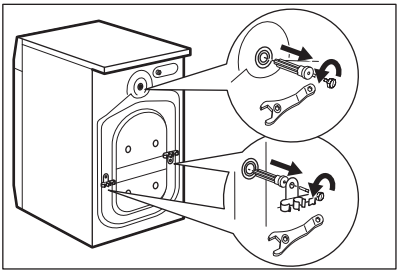

**11.** Pull out the plastic spacers.
**12.** Put the plastic caps, that you find in the user manual bag, in the holes.

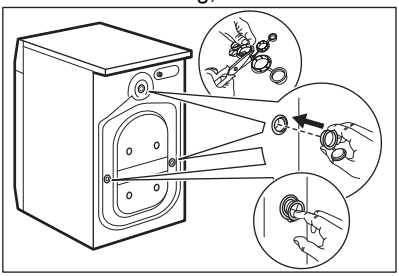

ⓘ

We recommend that you keep the packaging and the transit bolts for any movement of the appliance.

## 5.2 Installation on suspended flooring

Suspended wooden floors are particularly susceptible to vibration.

To limit vibration we recommend placing a waterproof wooden panel, at least 15 mm thick, under the appliance. It should be screwed to at least 2 floor beams and should extend beyond the front feet.

If possible, install the appliance where the floor is more stable.

## 5.3 Positioning and levelling

**1.** Install the appliance on a flat hard floor.

ⓘ

Make sure that carpets do not stop the air circulation below the appliance.
Make sure that the appliance does not touch the wall or other units.

**2.** Loosen or tighten the feet to adjust the level.

⚠ **WARNING!**

Do not put cardboard, wood or equivalent materials below the appliance feet to adjust the level.

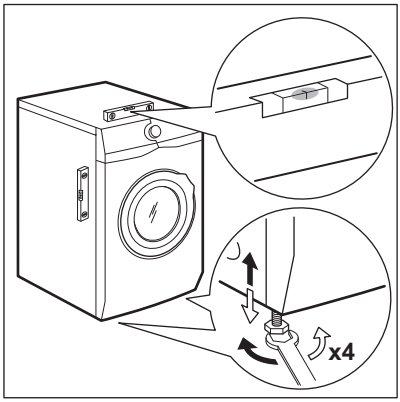


The appliance must be level and stable.

ⓘ

A correct adjustment of the appliance level prevents the vibration, noise and the movement of the appliance when in operation.

ⓘ

When the appliance is installed on a plinth, use the accessory described in chapter 'Accessories'. Read carefully the instructions supplied with the appliance and with the accessory.

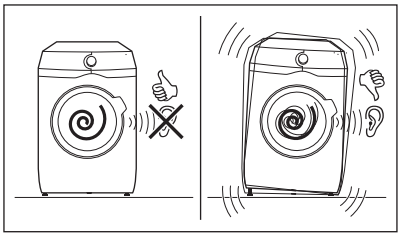

## 5.4 The inlet hose

**1.** Connect the water inlet hose to the back of the appliance if needed. Usually, it is

already installed at the factory.

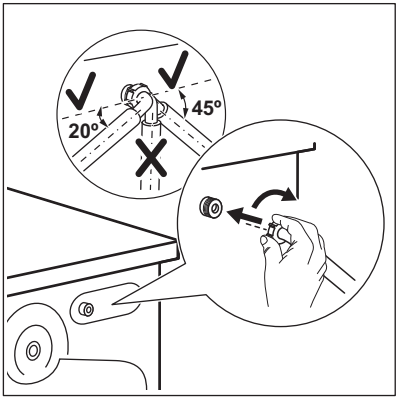


2. Position it toward left or right depending on the position of the tap. Make sure that the inlet hose is not in vertical position.
3. If necessary, loose the ring nut to set it in the correct position
4. Connect the water inlet hose to the cold water tap with 3/4" thread.

Some model can contain inlet hose with water stop device. It prevents any leaks in the hose because of its natural ageing. The sector in the window shows this fault A. If this occurs, close the water tap and contact the authorized service center for information to replace the hose.

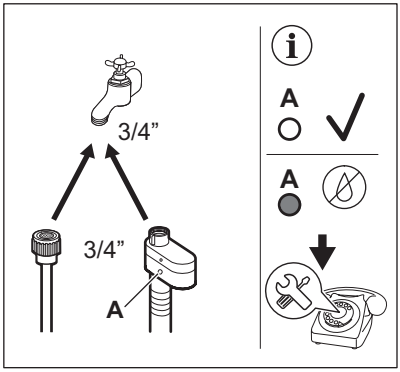


⚠ **WARNING!**

The inlet water shall not exceed 25 °C.

⚠ **CAUTION!**

Make sure that there are no leaks from the couplings.

ⓘ

Do not use an extension hose if the inlet hose is too short. Contact the service centre for information on inlet hose replacement.

## 5.5 Water-stop device

The inlet hose has a water stop device. This device prevents water leaks in the hose because of its natural ageing.

The red sector in the window «**A**» shows this fault.

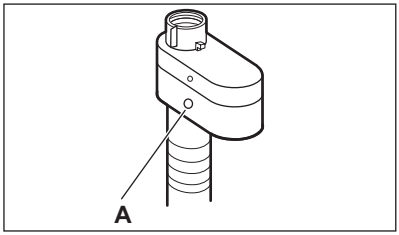


If this occurs, close the water tap and contact the authorized service centre to replace the hose.

## 5.6 Water drainage

The drain hose should be positioned at a height of not less than 60 cm and not more than 100 cm from the floor.

ⓘ

You can extend the drain hose to maximum 400 cm. Contact the authorized service centre to buy the other drain hose and the extension.

It is possible to connect the drain hose in different ways:

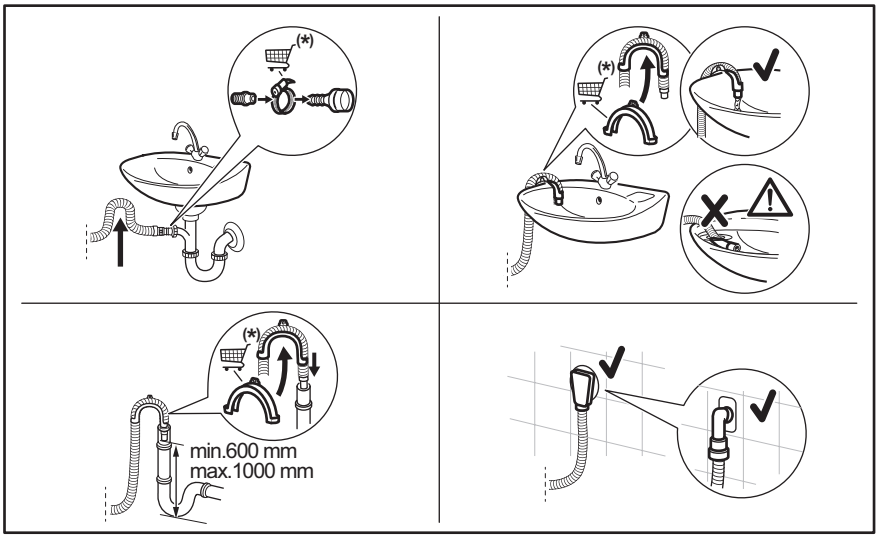


(*) Subject to change without notice.

- Connect the drain hose to the spigot and tighten it with a clamp.
- Position the hose directly to a built-in drain pipe in the room wall and tighten it with a clamp.
- Without the plastic hose guide, to a sink spigot - put the drain hose in the spigot and tighten it with a clamp.
- To a stand pipe with vent hole - insert the drain hose directly into a drain pipe or stand pipe.
- The drain hose can be bent into U shape and put around the plastic guide. On the edge of a sink - fasten the guide to the water tap or to the wall.

ⓘ

Make sure that the drain hose makes a loop to prevent particles going into the appliance from the sink.

ⓘ

Make sure that the plastic guide cannot move when the appliance drains and the drain hose end is not immersed in the water. There may be a return of dirty water into the appliance.
Buy accessories from authorised supplier.

ⓘ

The end of the drain hose must always be ventilated , i.e. the inner diameter of the drain pipe (min. 38 mm - min. 1.5") must be larger than the external diameter of the drain hose.

## 5.7 Electrical connection

At the end of installation you can connect the mains plug to the mains socket.

The rating plate and the 'Technical Data' chapter indicate the necessary electrical ratings. Make sure that they are compatible with the mains power supply.

Check that your domestic electrical installation can take the maximum load

required, also taking into account any other appliances may also be in use.

**Connect the appliance to an earthed socket.**

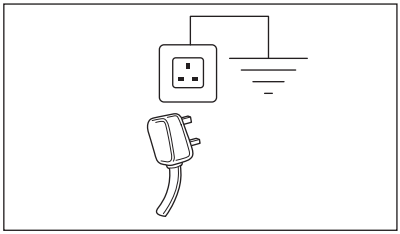

The power supply cable must be easily accessible after installing the appliance.

For any electrical work required to install this appliance, contact our Authorised Service Centre.

The manufacturer does not accept any responsibility for damage or injury through failure to comply with the above safety precaution.

# 6. CONTROL PANEL

## 6.1 Control panel description

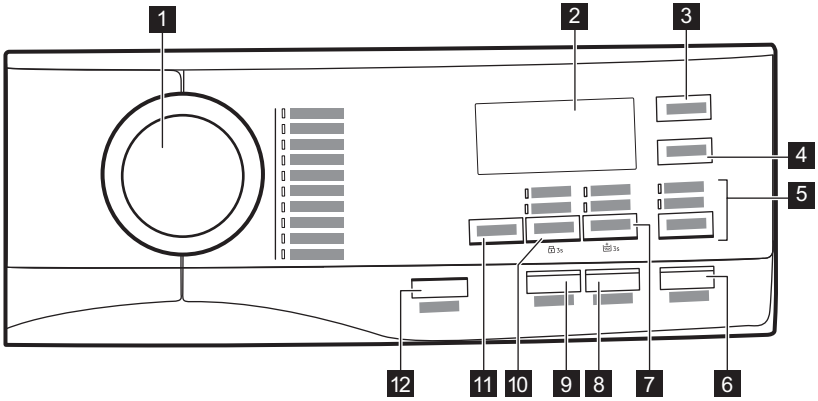


1 Programme dial
2 Display
3 Time Drying touch button
4 Auto Drying touch button
5 MODE touch button and
- Wash mode
- Dry mode

6 Start/Pause touch button
7 Options touch button, 3s permanent Extra Rinse option and
- Stains option
- Prewash option

8 Delay Start touch button
9 Time Save touch button
10 Spin touch button, 3s child lock option and
- Only Drain option
- Only Spin option

11 Temperature touch button
12 On/Off push button

## 6.2 Display

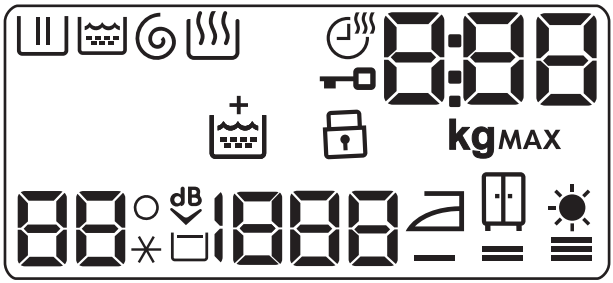


| | |
|---|---|
| | Washing phase indicator: it flashes during prewash and wash phase. |
| | Rinsing phase indicator. It flashes during rinse phase. |
| | Spin and drain phase indicator. It flashes during spin and drain phase. |
| | Drying phase indicator. |
| | Drying time indicator. |
| | Door locked indicator. |
| 8:88 | The digital indicator can show:<br>• Programme duration (e. g. 2:40, washing and/or drying phase).<br>• Delay time (e. g. 30' or 2h).<br>• Cycle end (0).<br>• Warning code (e.g. E20).<br>• Maximum load indicator (8.88 kg MAX). The value is shown for three seconds after programme selection, alternated with cycle duration. The kg icon flashes during laundry load estimation (refer to "PROSENSE load detection" paragraph). |
| MAX | Maximum laundry indicator. It flashes when the laundry load exceeds the maximum declared load of the selected programme. If you run a programme when the drum is overloaded, MAX also flashes at the end of the programme. |
| | The permanent Extra Rinse option. |
| | Child safety lock indicator. |
| 88° * | Temperature indicator. The _ _ * indicator appears when a cold wash is set. |
| dB | Quiet indicator. |
| | Rinse hold indicator. |

| | |
|---|---|
| 1888 | Spin speed indicator. |
| | Iron drying indicator. |
| | Cupboard drying indicator. |
| | Extra drying indicator. |

# 7. DIAL AND BUTTONS

## 7.1 On/Off

Pressing this button for a few seconds allows to activate or deactivate the appliance. Two different tunes sound while switching the appliance on or off.

As the Stand-by function automatically deactivates the appliance to decrease the energy consumption in a few cases, you may need to activate the appliance again.

For more details, refer to Stand-by paragraph in Daily Use chapter.

## 7.2 Introduction

ⓘ

The options/functions are not selectable with all washing programmes. Check the compatibility between options/functions and washing programmes in the "Programme Chart". An option/function can exclude another one, in this case the appliance doesn't allow you to set the incompatible options/functions together. Make sure the screen and touch buttons are always clean and dry.

## 7.3 Temperature

When you select a washing programme, the appliance automatically proposes a default temperature.

Touch this button repeatedly until the desired temperature value appears on the display.

When the display shows the indicators ✳ and – –, the appliance does not heat the water.

## 7.4 Spin

When you set a programme, the appliance automatically sets the default spin speed allowed.

Touch repeatedly this button to:

- **Change the spin speed.**

ⓘ

The display shows only the spin speeds available for the set programme.

- **Activate the Rinse Hold option.**
  The final spin is not performed. The water of the last rinse is not drained out to prevent the fabrics from creasing. The washing programme ends with water in the drum.

  The display shows the indicator ▭. The door stays locked and the drum turns regularly to reduce creasing. You must drain the water to unlock the door.
  If you touch the Start/Pause button, the appliance performs the spinning phase and drains the water.

ⓘ

The appliance empties the water out automatically after 18 hours approximately.

- **Activate the Quiet option.**

The intermediate and the final spinning phases are suppressed and the programme ends with water in the drum. This helps to reduce creasing.

The display shows the indicator dB. The door stays locked. The drum turns regularly to reduce creasing. You must drain the water to unlock the door.
As the programme is very quiet, it is suitable for use at night time when cheaper electricity tariffs are available. In some programmes the rinses are performed with more water.
If you touch the Start/Pause button, the appliance performs the only draining phase.

> The appliance empties the water out automatically after 18 hours approximately.

- **Activate the drain-only option** (**Skipping the wash, rinse and spin phases**): Only Drain.
  The appliance performs the only draining phase of the selected washing programme.

  The display shows the indicator – – (cold), and the indicator – – – (no spin) and the indicator.
- **Activate the spin-only option** (**Skipping the wash and rinse phases**): Only Spin.

> Before setting this option, select a suitable washing programme for the garments. The appliance will performs the most fitting spin cycle for your garments care (e.g. For synthetics items, first select the Synthetics washing programme and then the Only Spin option).

The appliance performs only the spinning phase of the selected washing programme.

The display shows the indicator – – (cold), the phase indicator and the spin speed.

## 7.5 Options

Press this button repeatedly to activate one of the two options.

The relevant indicator goes on in the display.

- **Stains**
  Select this option to add an anti-stain phase to a programme in order to treat heavily soiled or stained laundry with stain remover.
  Pour the stain remover into compartment . The stain remover will be added in the appropriate phase of the washing programme.

> This option is not available with a temperature lower than 40 °C.

- **Prewash**
  Use this option to add a pre-wash phase at 30 °C before the washing phase.
  This option is recommended for heavily soiled laundry, especially if containing sand, dust , mud and other solid particles.

> The options can increase the programme duration.

> These two options cannot be set together.

## 7.6 Delay Start

With this option you can delay the start of a programme in a more convenient time.

Tap on the button repeatedly to set the required delay. The time increases by steps of 30 minutes up to 90' and from 2 hours up to 20 h.

After starting the cycle by the means of the Start/Pause button, the display shows the selected delay time and the appliance begins the countdown.

## 7.7 Time Save

With this option you can decrease the programme duration.

- If your laundry is normally or lightly soiled, it may be advisable to shorten the washing programme. Touch this button **once** to decrease the duration.
- In case of smaller load, touch this button **twice** to set an extra quick programme.

On the display the programme duration is adjusted accordingly.

When this button is set, the led above the button is on.

> ⓘ
> This option can also be used to shorten the steam programme duration.

## 7.8 Time Drying

In the programme where it is selectable, touch this button to set the time that suits the fabrics you have to dry (refer to "Timed drying" table). The display shows the set value.

Each time you touch this button the time value increases by 5 minutes.

> ⓘ
> You cannot set all time values for different types of fabrics.

## 7.9 Auto Drying

Touch this button to set one of 3 automatic dryness levels proposed by the appliance.

On the display the relevant dryness indicator goes on:

- **Iron dry**: laundry to be ironed.
- **Cupboard dry**: laundry to be put in store.
- **Extra dry**: laundry to be fully dried.

> ⓘ
> You can not set all automatic levels for each type of fabrics.

## 7.10 MODE

Thanks to this button, a cycle can perform:

- **Only washing** : Wash indicator is on.
- **Washing and drying** : Wash and Dry indicators are on.
- **Only drying** : Dry indicator is on.

## 7.11 Start/Pause

Touch the Start/Pause button to start, pause the appliance or interrupt a running programme.

# 8. PROGRAMMES

## 8.1 Programme Chart

| Programme<br>Default temperature<br>Temperature range | Reference spin speed<br>Spin speed range | Maximum load | Programme description |
|---|---|---|---|
| Eco 40-60 (Wash only mode)<br>40 °C[1)] | 1600 rpm<br>1600 rpm - 400 rpm | 10.0 kg | **White cotton and fast-coloured cotton**. Normally soiled items. |
| Eco 40-60 + Cupboard dry level (Wash & Dry mode)<br>40 °C[2)] | 1600 rpm<br>1600 rpm - 1000 rpm | 6.0 kg | |
| Eco 40-60 + Cupboard dry level (Dry only mode) | - | 6.0 kg | **White cotton and fast-coloured cotton**. |
| Cottons<br>40 °C<br>95 °C - Cold | 1600 rpm<br>1600 rpm - 400 rpm | 10.0 kg | **White cotton and coloured cotton**. Normally, heavily and lightly soiled items. |
| Synthetics<br>30 °C<br>60 °C - Cold | 1200 rpm<br>1200 rpm - 400 rpm | 4.0 kg | **Synthetic items or mixed fabric items**. Normally soiled items. |
| Delicates<br>30 °C<br>40 °C - Cold | 1200 rpm<br>1200 rpm - 400 rpm | 2.0 kg | **Delicate fabrics such as acrylics, viscose and mixed fabrics requiring gentler washing**. Normally and lightly soiled items. |
| Wool/Handwash<br>40 °C<br>40 °C - Cold | 1200 rpm<br>1200 rpm - 400 rpm | 1.5 kg | **Machine washable wool, hand washable wool and other fabrics** with «hand washing» care symbol[3)]. |

| Programme<br>Default temperature<br>Temperature range | Reference spin speed<br>Spin speed range | Maximum load | Programme description |
|---|---|---|---|
| Outdoor<br>30 °C<br>40 °C - Cold | 1200 rpm<br>1200 rpm - 400 rpm | 2.0 kg | Do not use fabric softener and make sure that there is no softener residue in the detergent dispenser.<br>**Outdoor clothing, technical, sport fabrics, waterproof and breathable jackets, shell jackets with a removable fleece or inner insulation**.<br>By performing a combined wash and dry programme, the drying phase also acts as water repellent restorer. **Make sure that the garment care label permits tumble drying.** |
| Hygiene<br>60 °C | 1600 rpm<br>1600 rpm - 400 rpm | 10.0 kg | **White cotton items.** This high-performance wash program removes more than 99,99% of bacteria and viruses[4)] keeping the temperature above 60°C throughout the washing phase; an enhanced rinsing phase ensures a proper removal of detergent and micro-organism residues. This program ensures also a proper reduction of pollens/allergenic items. |
| Quick 20 min/NonStop<br>60 min<br>30 °C<br>40 °C - 30 °C | 1200 rpm | 1.0 kg | Programme to wash up to 1 kg of **mixed synthetic shirts** load in 20 minutes only. Add a drying phase to have a complete OneGo (wash&dry) cycle in 60 minutes. |
| Steam | | 1.0 kg | Cotton, synthetic and mixed items. Special steam cycle without washing that can be used to prepare your dried laundry for ironing or refreshing garments worn once. This programme reduces creases, odours and relaxes the fibres. Do not use any detergent.<br>When the programme is completed, quickly remove the laundry from the drum[5)]. If necessary, remove stains by washing or using localized stain removal. Steam programmes do not perform any hygienic cycle. Do not set a Steam programme with these types of items:<br>• Items that are not suitable for tumble drying.<br>• Items with label "Dry clean only". |

| Programme<br>Default temperature<br>Temperature range | Reference spin speed<br>Spin speed range | Maximum load | Programme description |
|---|---|---|---|
| Rinse | 1600 rpm<br>1600 rpm - 400 rpm | 10.0 kg | To rinse and spin the laundry. **All fabrics**, except woollens and very delicate fabrics. Reduce the spin speed accordingly to the type of laundry. |

**1)** According to UK Ecodesign for Energy-Related Products and Energy Information Regulations and to EU Ecodesign Regulation 2019/2023 and the EU Energy Label Regulation 2019/2014, this programme at default temperature and spin speed, in washing only mode, with rated capacity 10.0 kg is able to clean normally soiled cotton laundry declared to be washable at 40 °C or 60 °C, together in the same cycle.

ⓘ

For the reached temperature in the laundry, the programme duration and other data, please refer to 'Consumption Values' chapter.
The most efficient programmes in terms of energy consumption are generally those that perform at lower temperatures and longer duration.

**2)** According to UK Ecodesign for Energy-Related Products and Energy Information Regulations and to EU Ecodesign Regulation 2019/2023 and the EU Energy Label Regulation 2019/2014, this programme at default temperature and spin speed, in washing and drying mode, with rated capacity 6.0 kg and with Cupboard dry level performs the wash and dry cycle able to clean normally soiled cotton laundry declared to be washable at 40 °C or 60 °C, together in the same cycle and, after drying phase, the laundry can be immediately stored in a cupboard.

**3)** During this cycle the drum rotates slowly to ensure a gentle wash. It can seem that the drum doesn't rotate or doesn't rotate properly, but this is normal for this programme.

**4)** Tested for Staphylococcus aureus, Enterococcus faecium, Candida albicans, Pseudomonas aeruginosa and MS2 Bacteriophage in external test performed by Swissatest Testmaterialien AG in 2021 (Test Report No. 202120117).

**5)** If you set a Steam programme with dried laundry, at the end of the cycle the laundry can be humid. Line dry the items for about 10 minutes. This programme does not remove particularly intense odour.

## Programme options compatibility

| Programme / Options | Eco 40-60 | Cottons | Synthetics | Delicates | Wool/Handwash | Outdoor | Hygiene | Quick 20 min/NonStop 60 min | Steam | Rinse |
|---|---|---|---|---|---|---|---|---|---|---|
| Spin (Spin reduction) | ■ | ■ | ■ | ■ | ■ | ■ | ■ | | | ■ |

| Programme / Options | Eco 40-60 | Cottons | Synthetics | Delicates | Wool/Handwash | Outdoor | Hygiene | Quick 20 min/NonStop 60 min | Steam | Rinse |
|---|---|---|---|---|---|---|---|---|---|---|
| --- | | | | | | | ■ | | | |
| | ■ | ■ | ■ | ■ | ■ | ■ | ■ | | | ■ |
| dB | | ■ | ■ | ■ | | | | | | |
| Only Drain | ■ | ■ | ■ | ■ | ■ | ■ | ■ | | | |
| Only Spin 1) | ■ | ■ | ■ | ■ | ■ | ■ | ■ | | | |
| Extra Rinse | | ■ | ■ | ■ | | ■ | ■ | | | ■ |
| Prewash | | ■ | ■ | | | | ■ | | | |
| Stains 2) | | ■ | ■ | | | | ■ | | | |
| Delay Start | ■ | ■ | ■ | ■ | ■ | ■ | ■ | ■ | ■ | ■ |
| Time Save 3) | | ■ | ■ | ■ | | | | | ■ | |
| Time Drying | ■ | ■ | ■ | ■ | ■ | ■ | ■ | ■ | | |
| Auto Drying | ■4) | ■ | | | | | ■ | | | |

1) Before setting this option, select a suitable washing programme for the garments. The appliance will performs the most fitting spin cycle for your garments care (e.g. For synthetics items, first select the Synthetics washing programme and then the Only Spin option).

2) This option is not available with temperature lower than 40 °C.

3) If you set the shortest duration, we recommend that you decrease the load size. It is possible to fully load the appliance, however the washing results can be less satisfactory.

4) Not selectable with Iron Dry level.

**Suitable detergents for each programme**

| Programme | Universal powder[1)] | Liquid Universal | Liquid for coloureds | Delicates woollens | Special |
|---|---|---|---|---|---|
| Eco 40-60 | ▲ | ▲ | ▲ | -- | -- |
| Cottons | ▲ | ▲ | ▲ | -- | -- |
| Synthetics | ▲ | ▲ | ▲ | -- | -- |
| Delicates | -- | -- | -- | ▲ | ▲ |
| Wool/Handwash | -- | -- | -- | ▲ | ▲ |
| Outdoor | -- | -- | -- | ▲ | ▲ |
| Hygiene | ▲ | ▲ | -- | -- | ▲ |
| Quick 20 min/ NonStop 60 min | -- | ▲ | ▲ | -- | -- |

1) At temperature higher than 60 °C the use of powder detergent is recommended.

▲ = Recommended

-- = Not recommended

## 8.2 Woolmark Premium Wool Care - Blue

- The wool wash cycle of this machine has been tested and approved by The Woolmark Company for the washing of wool garments labelled as “hand wash” provided that the products are washed according to the instructions on the garment label and those issued by the manufacturer of this washing machine. M1230.
- The wool drying cycle of this machine has been tested and approved by The Woolmark Company. The cycle is suitable to dry wool garments which are labelled “hand wash” provided that the garments are washed in a Woolmark endorsed hand washing cycle and dried according to the instructions issued by the manufacturer of this washing machine. M1224.

## 8.3 Steam programmes

The Steam programmes can be used for reducing wrinkles and odours on garments (such as cottons, synthetics, mixed fabrics, including delicates) that just need to be refreshed, in a short time, avoiding washing.

The fabric fibres are relaxed and afterwards ironing becomes effortless. When the cycle is completed, quickly remove the laundry from the drum.

The cycle duration can be reduced till 15 minutes by means of the Time Save option.

**DO NOT** set this mode with the following type of items:
- Items that are not suitable for tumble drying.
- Items with label "Dry clean only".

ⓘ

Do not use any detergent!
The Steam programmes do not remove particularly intense odour and do not perform any hygienic cycle.
After the steam treatment the laundry can be humid. Hang items out for a few minutes.

## The fragrance (AEG Steam Fragrance)

The AEG Steam Fragrance allows you to refresh even your delicate clothes, removing wrinkles and adding freshness with a gentle fragrance developed exclusively by **AEG**. By refreshing your garments with steam, rather than running full wash cycles, you will keep your clothes looking and feeling new longer. You can even safely use the fragrance with Cashmere and Steam programmes - if they are available - for delicate fabrics like cashmere and wool. When treating smaller load reduce the fragrance dosage and the cycle duration: in only fifteen minutes, your clothes will regain that "just washed" feeling.

Read carefully the instructions supplied with the fragrance.

**DO NOT**:

- Tumble dry the garments treated with fragrance. Its benefit would evaporate.
- Use the fragrance with different purposes than those here described.
- Use the fragrance on new garments. New garments may contain residual finishing compounds which are not compatible with it.

ⓘ

The fragrance is available on **AEG** web shop or by authorised dealer.

## 8.4 Automatic drying

ⓘ

Initial cycle times for programmes with Auto Drying option are only estimates, the actual drying time may slightly differ from the time displayed.

| Dryness Level | Type of fabric | Load |
|---|---|---|
| **Extra Dry**<br>For towelling materials | **Cottons and Linen**<br>(bathrobes, bath towels, etc) | up to 6.0 kg |
| For items to be stored | **Cottons and Linen**<br>(bathrobes, bath towels, etc) | up to 6.0 kg |
| | **Synthetics and mixed fabrics**<br>(jumpers, blouses, underwear, household and bed linen) | up to 4.0 kg |
| | **Delicate fabrics**<br>(acrylics, viscose and delicate mixed fabrics) | up to 2.0 kg |
| | **Wool items**<br>(woollen jumpers) | up to 1.0 kg |
| | **Outdoor sporting garments**<br>(outdoor clothing, technical, sport fabrics, waterproof and breathable jackets, shell jackets) | up to 2.0 kg |

| Dryness Level | Type of fabric | Load |
|---|---|---|
| **Iron Dry**<br>Suitable for ironing | **Cottons and Linen**<br>(sheets, tablecloths, shirts, etc) | up to 6.0 kg |

## 8.5 Timed drying

| Dryness Level | Type of fabric | Load (kg)<br>Spin speed (rpm) | Suggested duration (mins) |
|---|---|---|---|
| **Extra Dry**<br>For towelling materials | **Cottons and Linen**<br>(bathrobes, bath towels, etc) | 6.0<br>1600 | 245 - 265 |
| | | 4.0<br>1600 | 165 - 185 |
| | | 2.0<br>1600 | 125 - 135 |
| **Cupboard Dry**<br>For items to be stored | **Cottons and Linen**<br>(bathrobes, bath towels, etc) | 6.0<br>1600 | 235 - 255 |
| | | 4.0<br>1600 | 155 - 175 |
| | | 2.0<br>1600 | 115 - 125 |
| | **Synthetics and mixed fabrics**<br>(jumpers, blouses, underwear, household and bed linen) | 4.0<br>1200 | 135 - 145 |
| | | 1.0<br>1200 | 40 - 50 |
| | **Delicates**<br>(acrylics, viscose and delicate mixed fabrics) | 2.0<br>1200 | 140 - 160 |
| | | 1.0<br>1200 | 70 - 80 |
| | **Wool**<br>(woollen jumpers) | 1.0<br>1200 | 110 - 130 |
| | **Outdoor sporting garments**<br>(outdoor clothing, technical, sport fabrics, waterproof and breathable jackets, shell jackets) | 2.0<br>1200 | 140 - 160 |
| | | 1.0<br>1200 | 70 - 80 |
| **Iron Dry**<br>Suitable for ironing | **Cottons and Linen**<br>(sheets, tablecloths, shirts, etc) | 6.0<br>1600 | 170 - 190 |
| | | 4.0<br>1600 | 105 - 125 |

| Dryness Level | Type of fabric | Load (kg) Spin speed (rpm) | Suggested duration (mins) |
|---|---|---|---|
| | | 2.0 1600 | 75 - 85 |

# 9. BEFORE FIRST USE

ⓘ

During installation or before first use you may observe some water in the appliance. This is a residual water left in the appliance after a full functional test in the factory to ensure the appliance is delivered to customers in perfect working order and is no cause for concern.

1. Make sure that all transit bolts have been removed from the appliance.
2. Make sure that the electrical power is available and the water tap is open.
3. Pour 2 litres of water into the detergent compartment marked by ⌊II⌋.

This action activates the drain system.

4. Pour a small quantity of detergent into the compartment marked by ⌊II⌋.
5. Set and start a programme for cotton at the highest temperature without any laundry in the drum.

This removes all possible dirt from the drum and the tub.

# 10. SETTINGS

## 10.1 Child Lock

With this option you can prevent children from playing with the control panel.

- To **activate/deactivate** this option, touch the Spin button until the indicator ⊡ **comes on/goes off** on the display.

You can activate this option:

- After you touch the Start/Pause button: all the buttons and the programme dial are deactivated (except On/Off button ).
- Before you touch the Start/Pause button: the appliance cannot start.

The appliance keeps the selection of this option after you switch it off.

## 10.2 Acoustic signals

To deactivate the acoustic signals when the programme is completed touch the Options and the Delay Start buttons simultaneously for about 3 seconds.

ⓘ

The acoustic signals, they continue operate when the appliance has a malfunction.

## 10.3 Permanent Extra Rinse 3s

With this option you can permanently have an extra rinse when you set a new programme.

To **activate/deactivate** this option, hold the Options button pressed for 3 seconds until the indicator **comes on/goes off** on the display.

When it is activated, the appliance will default to this option after you switch it off or change/reset the programme.

ⓘ

This option increases the programme duration.

# 11. DAILY USE

⚠ **WARNING!**

Refer to Safety chapters.

## 11.1 Activating the appliance

1. Connect the mains plug to the mains socket.
2. Open the water tap.
3. Press the On/Off button for a few seconds to activate the appliance. The indicator of the Start/Pause button starts flashing.

The programme dial is automatically set on default programme and only the indicator Wash is on above the MODE button.

The display shows the maximum load (for a few seocnds), the default temperature, the default spin speed, the indicators of the phases making up the programme and the cycle duration.

## 11.2 Loading the laundry

- Open the appliance door.
- Shake the items before you put them in the appliance.
- Put the laundry in the drum, one item at a time.

Make sure not to put too much laundry in the drum.

- Close the door firmly.

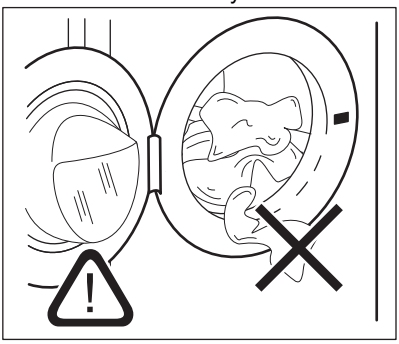

⚠ **CAUTION!**

- Make sure that no laundry stays between the seal and the door. There is a risk of water leakage or damage to the laundry.
- Washing heavily oiled, greasy stains or using fragrances perfume could cause damage rubber parts of the appliance.

## 11.3 Filling the detergent and additives

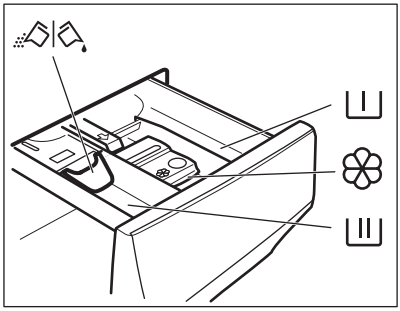

| | |
|---|---|
| I | Compartment for prewash phase, soak programme or stain remover. |
| II | Compartment for washing phase. |
| ❀ | Compartment for liquid additives (fabric conditioner, starch). |
| MAX | Maximum level for quantity of liquid additives. |
| | Flap for powder or liquid detergent. |

ⓘ

Always follow the instructions that you find on the packaging of the detergent products, but we recommend that you do not exceed the maximum indicated level (**MAX**). This quantity will however guarantee the best washing results.

ⓘ

After a washing cycle, if necessary, remove any detergent residue from the detergent dispenser.

## 11.4 Check the position of the flap

1. Pull out the detergent dispenser until it stops.
2. Press the lever down to remove the dispenser.
3. To use powder detergent, turn the flap up.
4. To use liquid detergent, turn the flap down .

ⓘ

**With the flap in the position DOWN:**

- Do not use gelatinous or thick liquid detergents.
- Do not put more liquid detergent than the limit shown on the flap.
- Do not set the prewash phase.
- Do not set the delay start function.

5. Measure out the detergent and the fabric conditioner.
6. Carefully close the detergent dispenser.

Make sure that the flap does not cause a blockage when you close the drawer.

## 11.5 Setting a programme

1. Turn the programme dial to select the desired washing programme. The related programme indicator comes on.

The indicator of the Start/Pause button flashes.
The display shows the maximum declared load for the programme (for a few seconds), the default temperature, the default spin speed, the washing phase indicators (when available) and an indicative programme duration.

2. To change the temperature and/or the spin speed, touch the related buttons.
3. If desired, set one or more options by touching the related buttons. The related indicators come on in the display and the given information changes accordingly.

ⓘ

To perform washing only, make sure that only the Wash indicator is on above the MODE button.

ⓘ

In case a selection is **not possible**, no indicator comes on and an acoustic signal sounds.

## 11.6 Starting a programme

Touch the Start/Pause button to start the programme.
The related indicator stops flashing and stays on.
The programme starts, the door is locked.
The display shows the indicator .

ⓘ

The drain pump can operate shortly before the appliance fills water.

## 11.7 Starting a programme with the delay start

1. Touch this repeatedly until the display shows the desired delay time. The indicator Delay Start comes on.
2. Touch the Start/Pause button.

The appliance starts the countdown of the delay start.
When the countdown is completed, the programme starts.

ⓘ

The ProSense estimation starts at the end of the countdown.

### Cancelling the delay start after the countdown has started

To cancel the delay start:

1. Touch the Start/Pause button to pause the appliance. The related indicator flashes.
2. Touch the Delay Start button repeatedly until the display shows .
3. Touch the Start/Pause button again to start the programme immediately.

### Changing the delay start after the countdown has started

To change the delay start:

1. Touch the Start/Pause button to pause the appliance. The related indicator flashes.
2. Touch the Delay Start button repeatedly until the display shows the desired delay time.
3. Touch the Start/Pause button again to start the new countdown.

## 11.8 The ProSense System load detection

> ⓘ
> The programme duration in the display is referred to a **medium/high load**.

After touching the Start/Pause button, the maximum declared load indicator goes off, the indicator flashes, the ProSense System starts the laundry load detection:

1. The appliance detects the load in the first 30 seconds, the indicator **kg** flashes. the digit area shows --- and the drum rotates shortly.
2. At the end of the load detection, the indicator **kg** stop flashing. The programme duration will be adjusted accordingly and could increase or decrease. After further 30 seconds, the water filling starts.

At the end of the load detection, **in case of drum overload**, the indicator **MAX** is flashing in the display.

In this case, for 30 seconds, it is possible to pause the appliance and remove the exceeding garments.

Once removed the exceeding garments, touch the Start/Pause button to start the programme again. The ProSense System phase can be repeated up to three times (see point 1).

**Important!** If the laundry amount will not be reduced, the washing programme starts anyway, despite the overload. In this case, it will be not possible to guarantee the best washing results.

> ⓘ
> About 20 minutes after the programme start, the programme duration could be adjusted again depending on the capacity of water absorption of the fabrics.

> ⓘ
> The ProSense System detection is carried out with complete washing programmes only (no skipping phase selected).

> ⓘ
> The ProSense System is not available with some programmes, such as Wool/ Handwash, programmes with short cycles and without washing phase.

## 11.9 Programme phase indicators

When the programme starts the indicator of the running phase flashes and the other phase indicators are steady on.

E.g. the washing or pre wash phase is running: .

When the phase ends the relevant indicator stops flashing and is steady on. The next phase indicator starts flashing.

E.g. the rinse phase is running: .

If you select the a steam programme, the steam phase indicator comes on.

## 11.10 Interrupting a programme and changing the options

When the programme is running, you can change **only some** options:

1. Touch the Start/Pause button.

The related indicator flashes.

2. Change the options. The given information in the display changes accordingly.
3. Touch the Start/Pause button again.

The washing programme continues.

## 11.11 Cancelling a running programme

1. Press the On/Off button to cancel the programme and to deactivate the appliance.
2. Press the On/Off button again to activate the appliance.

Now, you can set a new washing programme.

> ⓘ
>
> If the ProSense phase is already carried out and the water filling is already started, the new programme starts **without repeating the ProSense phase**. The water and the detergent are not drained out in order to avoid waste. The display shows the maximum duration of the programme, updating it about 20 minutes after the starting of the new programme.

## 11.12 Opening the door - Adding garments

While a programme or the delay start operates, the appliance door is locked.

> ⓘ
>
> If the temperature and level of the water in the drum are too high and/or the drum still rotates you cannot open the door.

1. Touch the Start/Pause button.

In the display the related door lock indicator goes off.

2. Open the appliance door. If necessary, add or remove the items.
3. Close the door and touch the Start/Pause button.

The programme or the delay start continues.

4. The door can be opened when the programme is complete, or set spinning or draining programme/option and than press Start/Pause button.

## 11.13 End of the programme

When the programme has finished, the appliance stops automatically. The acoustic signals operate (if they are active).

In the display all washing phase indicators become steady and the time area shows ▯.

The indicator of the Start/Pause button goes off.

The door unlocks and the indicator ⊸▯ goes off.

**MAX** flashes at the end of the programme in case of overloaded drum.

1. Press the On/Off button to deactivate the appliance.

After five minutes from the end of the programme, the energy saving function automatically deactivates the appliance.

> ⓘ

2. Remove the laundry from the appliance.
3. Make sure that the drum is empty.
4. Keep the door and the detergent dispenser slightly ajar to prevent mildew and odours.
5. Close the water tap.

## 11.14 Draining water out after end of cycle

If you have chosen a programme or an option that does not empty out the water of the last rinse, the programme is completed, but:

- The display shows the indicator ▯, the option indicator ▭ or dB and the door locked indicator ⊸▯. The indicator of the running phase flashes.
- The drum still turns at regular intervals to prevent the creases in the laundry.
- The door stays locked.
- You must drain the water to open the door:

1. If necessary, touch the Spin button to decrease the spin speed proposed by the appliance.
2. Touch the button:
   - If you have set ▭, the appliance drains the water and spins.
   - If you have set dB, the appliance only drains the water.

The option indicator ▭ or dB goes off, while the indicator ⊙ flashes and then goes off.

3. When the programme is completed and the door locked indicator goes off, you can open the door.
4. Press the On/Off button a few seconds to deactivate the appliance.

In any case, the appliance empties the water out automatically after approximately 18 hours.

### 11.15 Stand-by option

The Stand-by function automatically deactivates the appliance to decrease the energy consumption when:

- You do not use the appliance for 5 minutes before you touch the Start/Pause button.
  Press the On/Off button to activate the appliance again.
- After 5 minutes from the end of the washing programme.
  Press the On/Off button to activate the appliance again.
  Turn the programme dial to set a new cycle.

If you set a programme or an option that ends with water in the drum, the Stand-by function **doesn't deactivate** the appliance to remind you to drain the water.

## 12. DAILY USE - WASHING & DRYING

**WARNING!**

Refer to Safety chapters.

This appliance is an automatic washer dryer.

### 12.1 Complete wash&dry programmes

#### Non-automatic wash&dry programmes

In some washing programmes, you can combine Wash and Dry mode for running a complete wash&dry programme.

Proceed as follows:

1. After loading laundry and detergent, press the On/Off button for some seconds to activate the appliance.
2. Load the laundry one item at a time.
3. Put the detergent and the additives in the appropriate compartment.
4. Turn the programme dial to the washing programme. The display shows the default temperature and spin. If necessary, change them according to your laundry. The display also shows the maximum recommended load for washing phase.
5. Set the desired options, if there are available.
6. Touch the MODE button once to activate also the drying function. The Wash and Dry indicators come on. The indicators and appear on the display. The display also shows the maximum recommended load for a washing and drying programme (e.g. 6.0 kg for cottons).
7. Now, you can choose an automatic drying level or a specific timed drying.

### 12.2 Washing and Drying - Automatic levels

1. Tap on the Auto Drying button repeatedly until the display shows the required dryness level. The indicators in the display illuminate accordingly:

   a. **Iron dry**: for cotton items;

   b. **Cupboard dry**: for cotton and synthetic items;

c. — ═ ☀ **Extra dry**: for cotton items.

**The time value on the display is the duration of both cycles washing and drying, calculated on a default load size.**

> ⓘ
> To have a good drying by using less energy and in a shorter time, the appliance does not let you set a too low spin speed for the items to be washed and dried.

2. Touch button Start/Pause to start the programme. The PROSENSE estimation starts.

In the display the door locked indicator goes on, the indicator of the running phase starts flashing.
The display also shows the remaining programme time.

### 12.3 Washing and Timed Drying

1. Tap on the button Time Drying repeatedly to set the desired time value (see the "Timed drying" table the "Programmes" chapter). The drying level indicator goes off and the indicator comes on.

Each time you tap on this button the time value increases by 5 minutes. The display shows the set new time value.

2. Touch the Start/Pause to start the programme. The ProSense estimation starts.

In the display the door locked indicator comes on and the indicator of the running phase starts flashing.
The display also shows the remaining programme time.

### 12.4 At the end of the drying programme

- The appliance stops automatically.
- The acoustic signals operate (if they are active).
- In the display comes on.
- The indicator of button Start/Pause goes off. The door locked goes off
- Press the button On/Off for some seconds to deactivate the appliance.

> ⓘ
> After some minutes from the end of the programme, the energy saving function deactivates the appliance automatically.

1. Remove the laundry from the appliance.
2. Make sure that the drum is empty.

> ⓘ
> After drying phase, clean the drum, the seal and the inside of the door with a wet cloth.

## 13. DAILY USE - DRYING ONLY

> ⚠ **WARNING!**
> Refer to Safety chapters.

> ⓘ
> This appliance is an automatic washer dryer.

### 13.1 Preparation to drying

1. Press the On/Off button for some seconds to activate the appliance.

> ⓘ
> With a drying-only programme the display does not show the maximum load and the ProSense estimation is deactivated.

2. Load the laundry one item at a time.
3. Turn the programme dial to the programme suitable for the items to dry.
4. Tap on the MODE button twice to exclude washing and perform drying only. The Dry

indicator is on. The indicators and

appear on the display.

When drying a big amount of laundry, to have good drying performances, make sure that the laundry itself is not rolled up and that is uniformly distributed in the drum.

## 13.2 Drying - Automatic levels

1. Tap on the Auto Drying button repeatedly until the display shows the required dryness level. The indicators in the display illuminate accordingly:

   a. **Iron dry**: for cotton items;

   b. **Cupboard dry**: for cotton and synthetic items;

   c. **Extra dry**: for cotton items.

**The display shows the drying programme duration.**

To have a good drying by using less energy and in a shorter time, the appliance does not let you set a too low spin speed for the items to be washed and dried.

2. Touch button Start/Pause to start the programme.

In the display the door locked indicator goes on, the indicator of the running phase starts flashing.
The display also shows the remaining programme time.

## 13.3 Timed Drying

1. Tap on the button Time Drying repeatedly to set the desired time value (see the "Timed drying" table the "Programmes" chapter). The drying level indicator goes off and the indicator comes on.

Each time you tap on this button the time value increases by 5 minutes. The display shows the set new time value.

2. Touch the Start/Pause to start the programme.

In the display the door locked indicator comes on and the indicator of the running phase starts flashing.
The display also shows the remaining programme time.

## 13.4 At the end of the drying programme

- The appliance stops automatically.
- The acoustic signals operate (if they are active).
- In the display comes on.
- The indicator of button Start/Pause goes off. The door locked goes off
- Press the button On/Off for some seconds to deactivate the appliance.

After some minutes from the end of the programme, the energy saving function deactivates the appliance automatically.

1. Remove the laundry from the appliance.
2. Make sure that the drum is empty.

After drying phase, clean the drum, the seal and the inside of the door with a wet cloth.

# 14. FLUFF IN THE FABRICS

During the washing and/or drying phase, some types of fabric, (sponge, wool, sweatshirt) could release fluff.

The released fluff could stick to the fabrics during the next cycle.

This inconvenient increases with technical fabrics.

To prevent the fluff in your laundry:

- Do not wash dark fabrics after you washed and dried light coloured fabrics (hand towel, wool, sweatshirt ) and the contrary.
- Dry this type of fabrics at open air when they are washed the first time.
- Clean the drain filter.
- After the drying phase, clean the empty drum, the gasket and the door with a wet cloth.

**To remove the fluff inside the drum, proceed as follows:**

- Empty the drum.
- Clean the drum, the gasket and the door with a wet cloth.
- Set the rinse programme.
- Simultaneously press the Spin and the Time Save buttons until the display shows **CLE** to activate the cleaning function.
- Touch the Start/Pause button to start the programme.

ⓘ

If the appliance is frequently used, carry out the **CLE** programme regularly.

# 15. HINTS AND TIPS

⚠ **WARNING!**

Refer to Safety chapters.

## 15.1 The laundry load

- Divide the laundry into: white, coloured, synthetics, delicates and wool.
- Follow the washing instructions on the laundry care labels.
- Do not wash white and coloured items together.
- Some coloured items can discolour with the first wash. We recommend that you wash them separately for the first couple of times.
- Turn multilayered fabrics, wool and items with printed illustrations inside out.
- Pre-treat stubborn stains.
- Wash stubborn stains with a special detergent.
- Be careful with curtains. Remove the hooks and put the curtains in a washing bag or pillowcase.
- A very small load can cause balance problems with the spin phase leading to excessive vibration. If this occurs:
  - **a.** interrupt the programme and open the door (refer to "Daily Use" chapter);
  - **b.** manually redistribute the load so that the items are spaced evenly around the tub;
  - **c.** press the Start/Pause button. The spin phase continues.
- Button up pillowcases, close zippers, hooks and poppers. Tie up belts, cords, shoelaces, ribbons and any other loose elements.
- Do not wash laundry without hems or with cuts. Use a washing bag to wash small and/or delicate items (e.g. underwired bras, belts, tights, shoelaces, ribbons, etc. ).

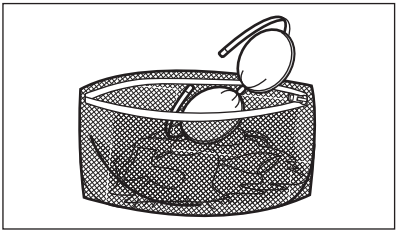

- Empty pockets and unfold the items.

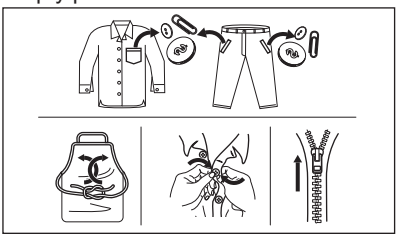

## 15.2 Stubborn stains

For some stains, water and detergent is not sufficient.

We recommend that you pre-treat these stains before you put the items in the appliance.

Special stain removers are available. Use the special stain remover that is applicable to the type of stain and fabric.

Do not spray stain remover on garments near the appliance as it is corrosive to the plastic parts.

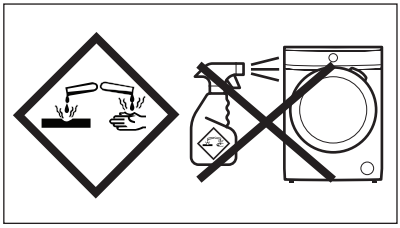

## 15.3 Detergent type and quantity

The choice of detergent and use of correct quantities not only affects your wash performance, but also helps to avoid waste and protect the environment:

- Use only detergents and other treatments specially made for washing machines. First, follow these generic rules:
  - powder detergents (also tablets and single-dose detergents) for all types of fabric, excluding delicate. Prefer powder detergents containing bleach for whites and laundry sanitization,
  - liquid detergents (also single-dose detergents) , preferably for low temperature wash programmes (60 °C max) for all types of fabric, or special ones for woollens only.
- The choice and quantity of detergent will depend on: type of fabric (delicates, woollens, cottons, etc), the colour of clothes, size of the load, degree of soiling, wash temperature, time and hardness of the water used.
- Follow the instructions that you find on packaging of the detergents or other treatments without exceeding the indicated maximum level (**MAX**).
- Do not mix different types of detergents.
- Use less detergent if:
  - you are washing a small load,
  - the programme duration has been reduced by the Time Manager button.
  - the laundry is lightly soiled,
  - there is large amounts of foam during washing.
- When using detergent tabs or pods, always put them inside the drum, not in the detergent dispenser and follow the manufacturer's recommendations .

**Insufficient detergent may cause:**

- unsatisfactory washing results,
- the wash load to turn grey,
- greasy clothes,
- mould in the appliance.

**Excessive detergent may cause:**

- sudsing,
- reduced washing effect,
- inadequate rinsing,
- a greater impact for the environment.

## 15.4 Savings tips

To save water, energy and detergent we recommend that you follow these tips:

- **Normally soiled laundry** may be washed **without prewash** in order to save detergent, water and time.
- Loading the appliance to the **maximum capacity indicated for each programmes helps to reduce energy and water consumption**.
- With adequate pre-treatment, stains and limited soiling can be removed; the laundry can then be washed at a lower temperature.
- To use the correct quantity of detergent, refer to the quantity suggested by the detergent producer and check the water hardness of your domestic system. Refer to 'Water hardness'.
- Set the **maximum possible spin speed** for the selected programme in order to save energy during drying.
- Preferably, use short cycles at lower temperatures.

## 15.5 Water hardness

If the water in your area is hard or medium hard, we recommend that you use a water softener additive for washing machines.

In areas where the water is soft it is not necessary to use a water softener.

To find out the water hardness in your area, contact your local water authority.

Use the correct quantity of water softener. Follow the instructions that you find on the packaging of the product.

### 15.6 Prepare the drying cycle

- Open the water tap.
- Check if the drain hose is connected properly. Refer to installation chapter for more information.
- For the maximum laundry load of the drying programmes, refer to the drying programmes table.

### 15.7 Items not suitable for drying

**Do not set a drying programme for this laundry:**

- Synthetic curtains.
- Pieces of clothing with metal inserts.
- Nylon stockings.
- Quilts.
- Bed covers.
- Duvets.
- Anoraks.
- Sleeping bags.
- Fabrics with residue of hair sprays, nail solvents or similar.
- Garments with foam-rubber or materials similar to foam-rubber.

### 15.8 Garment labels

When you dry the laundry, obey the indications on the labels of the manufacturers:

- = The item can be tumble dried
- = The drying cycle is at high temperature
- = The drying cycle is at reduced temperature
- = The item can not be tumble dried.

### 15.9 Drying cycle duration

The drying time can change depending on:

- speed of the last spin
- dryness level
- type of laundry
- weight of the load

### 15.10 Additional drying

If, at the end of the drying programme, the laundry is still damp, set a short drying cycle again.

> ⚠ **WARNING!**
>
> **To avoid creasing and shrinkage do not overdry the laundry.**

### 15.11 General Tips

Refer to the «Drying programmes» table to find the **average** drying times.
Experience will help you to dry the laundry better. Take note of the duration of the cycles done before.

To avoid the static charge at the end of the drying cycle:

1. Use fabric conditioner in the washing cycle.
2. Use special fabric conditioner for tumble dryers.

When the drying programme is completed remove the laundry promptly.

## 16. CARE AND CLEANING

> ⚠ **WARNING!**
>
> Refer to Safety chapters.

### 16.1 Periodic cleaning schedule

**Periodic cleaning helps to extend the life of your appliance.**

After each cycle, keep the door and the detergent dispenser slightly open to get air circulation and dry the humidity inside the appliance: this will prevent mildew and odours.

If the appliance is not used for a long time: close the water tap and unplug the appliance.

**Indicative periodic cleaning schedule:**

| | |
|---|---|
| Descaling | Twice a year |
| Maintenance wash | Once a month |

| | |
|---|---|
| Clean door seal | Every two months |
| Clean drum | Every two months |
| Remove fluff inside the drum | Twice a month[1)] |
| Clean detergent dispenser | Every two months |
| Clean drain pump filter | Twice a year |
| Clean the inlet hose and the valve filter | Twice a year |

1) Refer to "Fluff in the fabrics" chapter.

The following paragraphs explain how you should clean each part.

## 16.2 Removing foreign objects

ⓘ

Make sure that pockets are empty and all loose elements are tied up before running your cycle. Refer to "The laundry load" in "Hints and tips".

Remove any foreign objects (such as metal clip, buttons, coins, etc) that you may find in the door seal, the filters and the drum. Refer to "Door seal with double lip trap", "Cleaning the drum", "Cleaning the drain pump" and "Cleaning the inlet hose and the valve filter" paragraphs. If necessary, please contact the Authorised Service Centre.

## 16.3 External cleaning

Clean the appliance with mild soap and warm water only. Fully dry all the surfaces.

Do not use a scouring pads or any scratching material.

⚠ **CAUTION!**

Do not use alcohol, solvents or chemical products.

⚠ **CAUTION!**

Do not clean the metal surfaces with chlorine-based detergent.

## 16.4 Descaling

ⓘ

If the water in your area is hard or medium hard, we recommend that you use a water softener for washing machines.

Regularly examine the drum to check for limescale.

The regular detergents already contain water softening agents, but we recommend to run a cycle with empty drum and a descaling product occasionally.

ⓘ

Always follow the instructions that you find on the packaging of the product.

## 16.5 Maintenance wash

The repeated and prolonged use of low temperature programmes can cause detergent deposits, fluff residues, bacterial growth inside the drum and the tub. This could generate bad odours and mildew.

To eliminate these deposits and hygienize the inner part of the appliance, run a maintenance wash regularly (at least once a month):

1. Remove all laundry from the drum.
2. Run a cotton programme with the highest temperature with a small quantity of powder detergent or, if available, run the Machine Clean programme.

## 16.6 Door seal

This appliance is designed with a **self cleaning draining system**, allowing light fluff fibers that fall off the clothes to be drained out with the water. Regularly examine the seal and if necessary clean as described in the following diagram. Coins, buttons, other small items can be recovered at the end of the cycle.

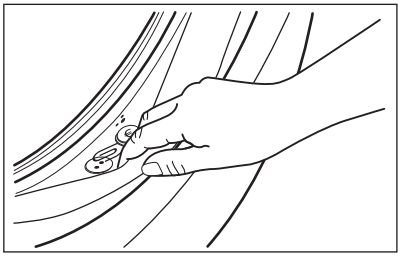

Clean it when needed, using ammonia cream cleanser agent without scratching the seal surface.

> ⓘ
> Always obey the instructions that you find on the packaging of the product.

## 16.7 Cleaning the drum

Regularly examine the drum to prevent unwanted deposits.
Rust deposits in the drum may occur due to rusting foreign body in the washing or tap water containing iron.

Clean the drum with special products for stainless steel.

> ⓘ
> Always follow the instructions that you find on the packaging of the product.
> Do not clean the drum with acidic descaling products, scouring products containing chlorine or iron or steel.

For a thorough clean:

1. Clean the drum with special products for stainless steel.

> ⓘ
> Always follow the instructions that you find on the packaging of the product.

2. Run a short cotton programme at high temperature with empty drum and with a small quantity of powder detergent or, if available, run the Machine Clean programme.

## 16.8 Cleaning the detergent dispenser

To prevent possible deposits of dried detergent or clotted fabric softener and/or formation of mould in the detergent dispenser drawer, every two months carry out the following cleaning procedure how explained in the following diagrams:

1. Open the drawer. Press the catch downwards as indicated in the picture and pull it out.

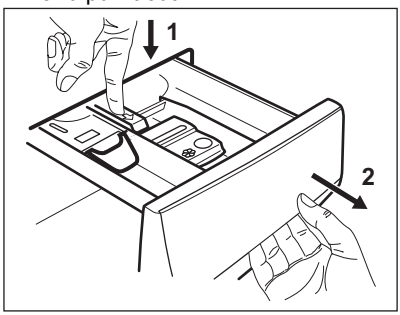


2. Remove the top part of the additive compartment to aid cleaning. Make sure that all detergent residue is removed from the upper and lower part of the recess. Use a small brush to clean the recess.

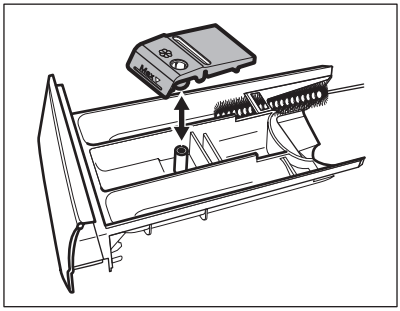

3. Flush the detergent drawer out under running warm water to remove any traces of accumulated detergent. After cleaning, replace the top part in its position.

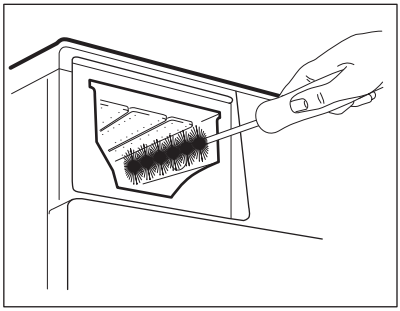

4. Insert the detergent drawer into the guide rails and close it. Run the rinsing programme without any clothes in the drum.

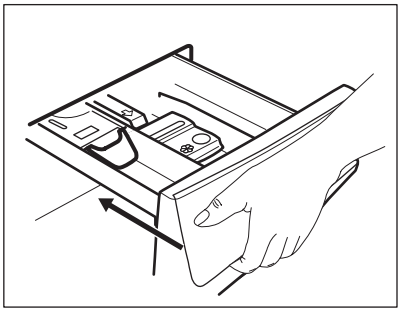

## 16.9 Cleaning the drain pump filter

⚠ **WARNING!**

Disconnect the mains plug from the mains socket.

ⓘ

Regularly check the drain pump filter and make sure that it is clean.

Clean the drain pump filter if:

- The appliance does not drain the water.
- The drum does not turn.
- The appliance makes an unusual noise because of the blockage of the drain pump.
- The display shows the alarm code E20.

⚠ **WARNING!**

- Do not remove the filter while the appliance operates.
- Do not clean the pump if the water in the appliance is hot. Wait until the water cools down

**Proceed as described in following diagrams to clean the pump filter:**

1. Open the pump cover.

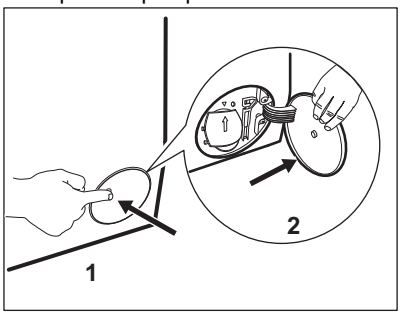


2. Place a suitable bowl below the drain pump access to collect the water that flows out.
3. Open the chute downwards. Always keep a rag nearby to dry up any water spillages when removing the filter.

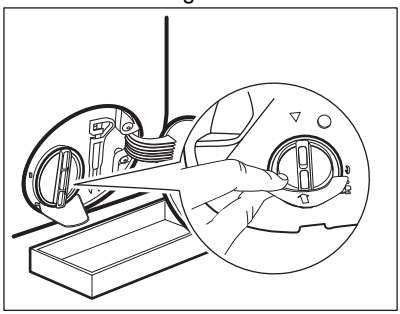

4. Turn the filter 180 degrees in anti-clockwise direction to open it, without removing. Let the water flow out.

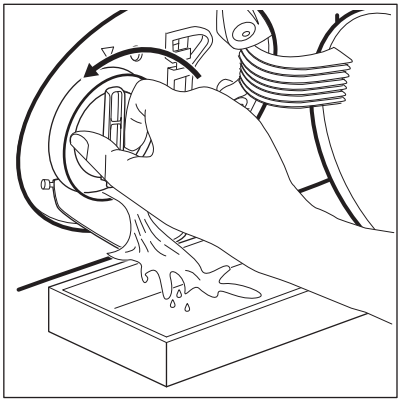

5. When the bowl is full of water, turn the filter back and empty the container.
6. Repeat the steps 4 and 5 until the water stops to flow out.
7. Turn the filter anti-clockwise to remove it.

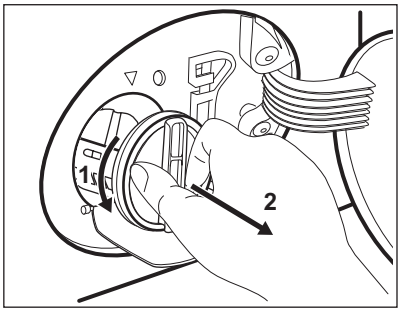


8. If it is necessary, remove fluff and objects from the filter recess.
9. Make sure that the impeller of the pump can rotate. If it does not rotate, contact the Authorised Service Centre.

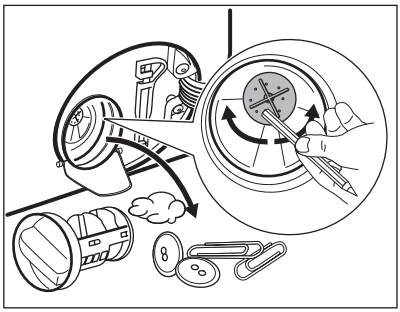

10. Clean the filter under the water tap.

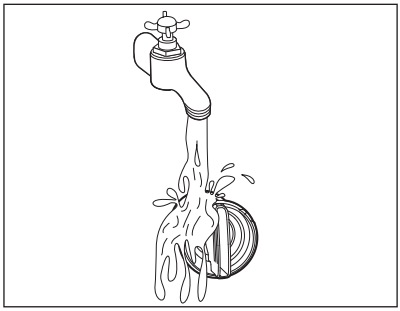

11. Put the filter back into the special guides by turning it clockwise. Make sure that you tighten the filter correctly to prevent leakages.

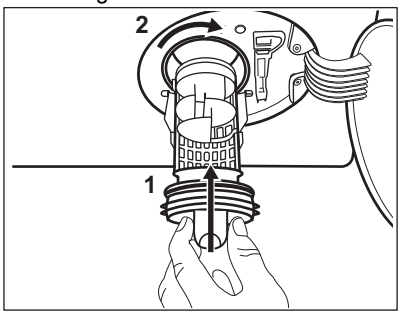


12. Close the pump cover.

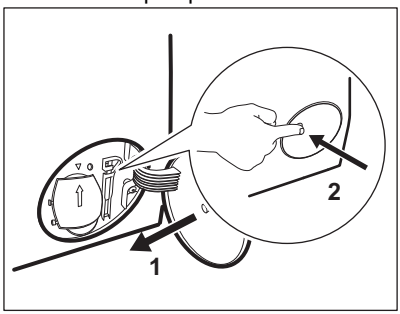


When you drain the water with the emergency drain procedure, you must activate the drain system again:

a. Put 2 litres of water in the main wash compartment of the detergent dispenser.
b. Start the programme to drain the water.

## 16.10 Cleaning the inlet hose and the valve filter

It is recommended to clean both the filters of the inlet hose and valve twice a year to remove any deposit, collected over the time. Proceed as described in following diagrams to clean filters:

1. Remove the inlet hose from the tap and clean the filter.

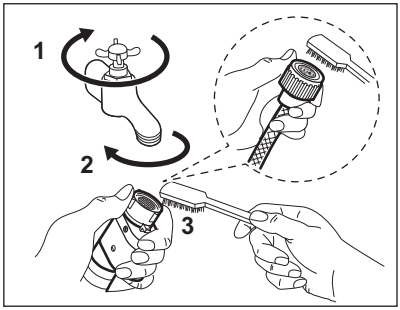


2. Remove the inlet hose from the appliance by loosening the ring nut.

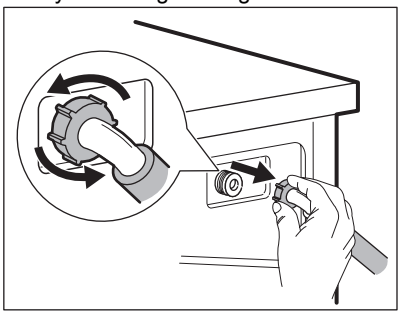

3. Clean the valve filter on the back of the appliance with a toothbrush.

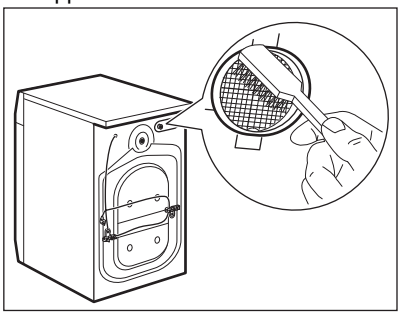

4. When you reconnect the hose to the back of the appliance, turn it left or right (not in vertical position) depending on the position of your water tap.

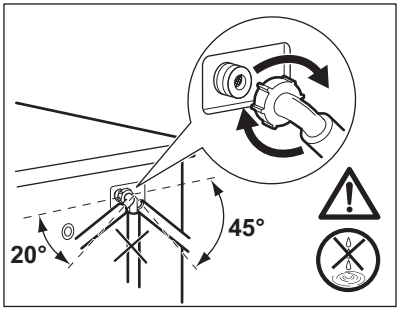


## 16.11 Emergency drain

If the appliance cannot drain the water, carry out the same procedure, described in 'Cleaning the drain pump' paragraph. If necessary, clean the pump.

When you drain the water with the emergency drain procedure, you must activate the drain system again:

1. Put 2 litres of water in the main wash compartment of the detergent dispenser.
2. Start the programme to drain the water.

## 16.12 Frost precautions

If the appliance is installed in an area where the temperature can reach the values around 0° C or drop below, remove the remaining water from the inlet hose and the drain pump.

1. Disconnect the mains plug from the mains socket.
2. Close the water tap.
3. Put the two ends of the inlet hose in a container and let the water flow out of the hose.
4. Empty the drain pump. Refer to the emergency drain procedure.
5. When the drain pump is empty, install the inlet hose again.

**⚠ WARNING!**

Make sure that the temperature is higher than 0 °C before you use the appliance again.
The manufacturer is not responsible for damages caused by low temperatures.

# 17. TROUBLESHOOTING

⚠ **WARNING!**

Refer to Safety chapters.

## 17.1 Alarm Codes and Possible failures

The appliance does not start or it stops during operation. First try to find a solution to the problem (refer to the tables).

⚠ **WARNING!**

Deactivate the appliance before carrying out any check.

**With some problems, the display shows an alarm code and the** Start/Pause **button may flash continuously:**

ⓘ

If the appliance is overloaded, remove some items from the drum and/or keep pressed the door while touching the Start/Pause button until the indicator stops flashing (see the picture below).

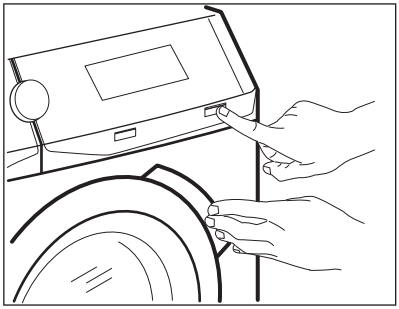

| Problem | Possible solution |
|---|---|
| E 10<br>The appliance does not fill with water properly. | • Make sure that the water tap is open.<br>• Make sure that the pressure of the water supply is not too low. For this information, contact your local water authority.<br>• Make sure that the water tap is not clogged.<br>• Make sure that the inlet hose has no kinks, damages or bends.<br>• Make sure that the connection of the water inlet hose is correct.<br>• Make sure that the filter of the inlet hose and the filter of the valve are not clogged. Refer to 'Care and cleaning'. |

| | |
|---|---|
| E20<br>The appliance does not drain the water. | • Make sure that the sink spigot is not clogged.<br>• Make sure that the drain hose has no kinks or bends.<br>• Make sure that the drain filter is not clogged. Clean the filter, if necessary. Refer to "Care and cleaning".<br>• Make sure that the connection of the drain hose is correct.<br>• Set the drain programme if you set a programme without drain phase.<br>• Set the drain programme if you set an option which ends with water in the tub. |
| E40<br>The appliance door is open or not closed correctly. | • Make sure that the door is properly closed. |
| E91<br>Internal fail. No communication between electronic elements of the appliance. | • The programme was not finished properly or the appliance stopped too early. Switch the appliance off and on again.<br>• If the alarm code appears again, contact the Authorised Service Centre. |
| EH0<br>The mains supply is unstable. | • Wait until mains supply is stable. |
| EF0<br>The anti-flood device is on. | • Disconnect the appliance and close the water tap. Contact the Authorised Service Centre. |

If the display shows other alarm codes, deactivate and activate the appliance. If the problem continues, contact the Authorised Service Centre.
In case of different problem with the appliance check the table below for possible solutions.

| Problem | Possible solution |
|---|---|
| The programme does not start. | • Make sure that the mains plug is connected to the mains socket.<br>• Make sure that the appliance door is closed.<br>• Make sure that there is no damaged fuse in the fuse box.<br>• Make sure that the Start/Pause has been touched.<br>• If the delay start is set, cancel the setting or wait for the end of countdown.<br>• Deactivate the Child Lock function if it is on.<br>• Check the position of the knob on the selected programme. |
| The appliance fills with water and drains immediately. | • Make sure that the drain hose is in the correct position. The hose may be positioned too low. Refer to "Installation instruction". |
| The spin phase does not operate or the washing cycle lasts longer than usual. | • Set the spin programme.<br>• Make sure that the drain filter is not clogged. Clean the filter, if necessary. Refer to "Care and cleaning".<br>• Adjust manually the items in the tub and start the spin phase again. This problem may be caused by balance problems. |
| There is water on the floor. | • Make sure that the couplings of the water hoses are tight and there is not water leakages.<br>• Make sure that the water inlet hose and the drain hose have no damages.<br>• Make sure you use the correct detergent and the correct quantity of it. |

| Problem | Possible solution |
|---|---|
| You cannot open the appliance door. | • Make sure that a washing programme that ends with water in tub, has not been selected.<br>• Make sure that the washing programme is finished.<br>• Set the drain or the spin programme if there is water in the drum.<br>• Make sure that the appliance receives electrical power.<br>• This problem may be caused by a failure of the appliance. Contact the Authorised Service Centre.<br>If you need to open the door, please read carefully "Emergency door opening". |
| The appliance makes an unusual noise and vibrates. | • Make sure the levelling of the appliance is correct. Refer to "Installation instruction".<br>• Make sure that the packaging and/or the transit bolts are removed. Refer to "Installation instruction".<br>• Add more laundry in the drum. The load may be too small. |
| The programme duration increases or decreases during programme execution. | • The ProSense System is able to adjust the programme duration according to the type and the laundry load size. Refer to "The ProSense System load detection" in "Daily Use" chapter. |
| The washing results are not satisfactory. | • Increase the detergent quantity or use a different detergent.<br>• Use special products to remove the stubborn stains before you wash the laundry.<br>• Make sure that you set the correct temperature.<br>• Decrease the laundry load. |
| Too much foam in the drum during the washing cycle. | • Reduce the quantity of detergent or the number of tablets or single-dose detergents. |
| After the washing cycle, there are some detergent residues in the dispenser drawer. | • Make sure that the flap is in the correct position (UP for powder detergent - DOWN for liquid detergent).<br>• Make sure you have used the detergent dispenser according the indications given in this user manual. |
| The appliance does not dry or does not dry correctly. | • Turn the water tap on.<br>• Make sure the drain filter is not clogged.<br>• Reduce the laundry load.<br>• Make sure you have set the correct cycle. if necessary, set again a short drying time. |
| The laundry is full of different colours fluff. | The fabrics washed in the previous cycle released fluff of a different colour:<br>• The drying phase helps to eliminate some fluff.<br>• Clean the clothes with a fluff remover.<br>In case of an excessive amount of fluff in the drum refer to “Fluff in the fabrics" paragraph for more details. |

After the check, activate the appliance. The programme continues from the point of interruption.
If the problem occurs again, contact the Authorised Service Centre.
The necessary data for the service centre are on the rating plate.

## 17.2 Emergency door opening

In case of power failure or functioning failure the appliance door remains locked. The washing programme continues when the power is restored. If the door remains locked in case of failure, it is possible to open it using the emergency unlock function.

Before opening the door:

⚠ **CAUTION!**

**Risk of burns! Make sure that the water temperature is not too high and the laundry is not hot. If necessary, wait until they cool down.**

⚠ **CAUTION!**

**Risk of injury! Make sure that the drum is not rotating. If necessary, wait until the drum stops rotating.**

ⓘ

**Make sure that the water level inside the drum is not too high. If necessary, proceed with an emergency drain (refer to «Emergency drain» in «Care and cleaning» chapter).**

To open the door, proceed as follows:

1. Press the On/Off button to switch the appliance off.
2. Disconnect the mains plug from the mains socket.
3. Open the filter flap.
4. Pull the emergency unlock trigger downward once. Pull it downward once again, keep it tensed and, in the meanwhile, open the appliance door.

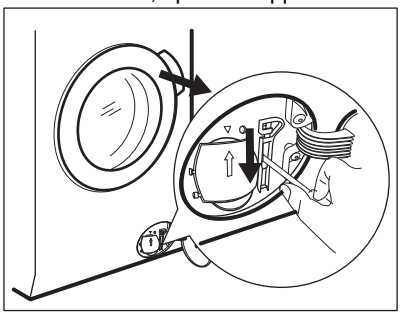

5. Take out the laundry and then close the appliance door.
6. Close the filter flap.

# 18. CONSUMPTION VALUES

## 18.1 Introduction

ⓘ

The QR codes on the EU and UK energy labels supplied with the appliance provide a web link to the information related to the performance of the appliance. For the energy label with the EU flag, it is also possible to find the information in the EU EPREL database using the link https://eprel.ec.europa.eu and the model name and product number that you find on the rating plate of the appliance. Refer to 'Product description' chapter for the position of the rating plate. Keep the energy labels for reference together with the user manual and all other documents provided with this appliance.

## 18.2 Legend

| | | | |
|---|---|---|---|
| **kg** | Laundry load. | **hh:mm** | Programme duration. |
| **kWh** | Energy consumption. | **°C** | Temperature in the laundry. |
| **Litres** | Water consumption. | **rpm** | Spin speed. |
| **%** | Remaining moisture at the end of the cycle. The higher is the spin speed, the higher is the noise and the lower is the remaining moisture at the end of washing cycle. | | |

ⓘ

Values and programme duration may differ depending on different conditions (e.g. room temperature, water temperature and pressure, load size and type of laundry, supply voltage) and also if you change the default setting of a programme.

## 18.3 According to UK Ecodesign for Energy-Related Products and Energy Information Regulations and to EU Ecodesign Regulation 2019/2023 and the EU Energy Label Regulation 2019/2014

### Washing only

| Eco 40-60 programme | kg | kWh | Litres | hh:mm | % | °C | rpm[1)] |
|---|---|---|---|---|---|---|---|
| Full load | 10.0 | 0.900 | 61.0 | 03:55 | 52.00 | 37.0 | 1551 |
| Half load | 5.0 | 0.605 | 47.0 | 02:50 | 52.00 | 33.0 | 1551 |
| Quarter load | 2.5 | 0.200 | 38.0 | 02:30 | 54.00 | 23.0 | 1551 |

1) Maximum spin speed.

### Wash and dry cycle

| Eco 40-60 programme and Cupboard dry level | kg | kWh | Litres | hh:mm | % | °C | rpm[1)] |
|---|---|---|---|---|---|---|---|
| Full load | 6.0 | 3.795 | 87.0 | 07:45 | 0.00 | 27.0 | 1551 |
| Half load | 3.0 | 1.980 | 58.0 | 05:00 | 0.00 | 25.0 | 1551 |

1) Maximum spin speed.

### Power consumption in different modes

| Off (W) | Stand-by (W) | Delay start (W) |
|---|---|---|
| 0.50 | 0.50 | 4.00 |
| Time to Off/Standby mode is 15 minutes maximum. | | |

## 18.4 Common programmes - Washing only

ⓘ

These values are indicative only.

| Programme | kg | kWh | Litres | hh:mm | % | °C | rpm 1) |
|---|---|---|---|---|---|---|---|
| Cottons 2) 95°C | 10.0 | 2.900 | 90.0 | 04:05 | 44.0 | 85.0 | 1600 |
| Cottons 60°C | 10.0 | 1.700 | 85.0 | 03:50 | 44.0 | 55.0 | 1600 |
| Cottons 3) 20°C | 10.0 | 0.350 | 85.0 | 03:00 | 44.0 | 20.0 | 1600 |
| Synthetics 40°C | 4.0 | 0.800 | 55.0 | 02:15 | 35.0 | 40.0 | 1200 |
| Delicates 4) 30°C | 2.0 | 0.400 | 60.0 | 01:05 | 35.0 | 30.0 | 1200 |
| Wool 30°C | 1.5 | 0.300 | 65.0 | 01:05 | 30.0 | 30.0 | 1200 |

1) Reference indicator of the spin speed.

2) Suitable for washing heavily soiled textiles.

3) Suitable for washing lightly soiled cottons, synthetic and mixed fabrics.

4) It also performs as quick washing cycle for lightly soiled laundry.

## 18.5 Common programmes - Wash and dry

ⓘ

These values are indicative only.

| Programme | kg | kWh | Litres | hh:mm | % | °C | rpm 1) |
|---|---|---|---|---|---|---|---|
| Synthetics 40°C | 4.0 | 2.800 | 85.0 | 05:00 | 1.00 | 40.0 | 1200 |

1) Reference indicator of the spin speed.

# 19. ENVIRONMENTAL CONCERNS

Recycle materials with the symbol ♲. Put the packaging in relevant containers to recycle it. Help protect the environment and human health by recycling waste of electrical and electronic appliances. Do not dispose of appliances marked with the symbol with the household waste. Return the product to your local recycling facility or contact your municipal office.

aeg.com

157091811-A-082025